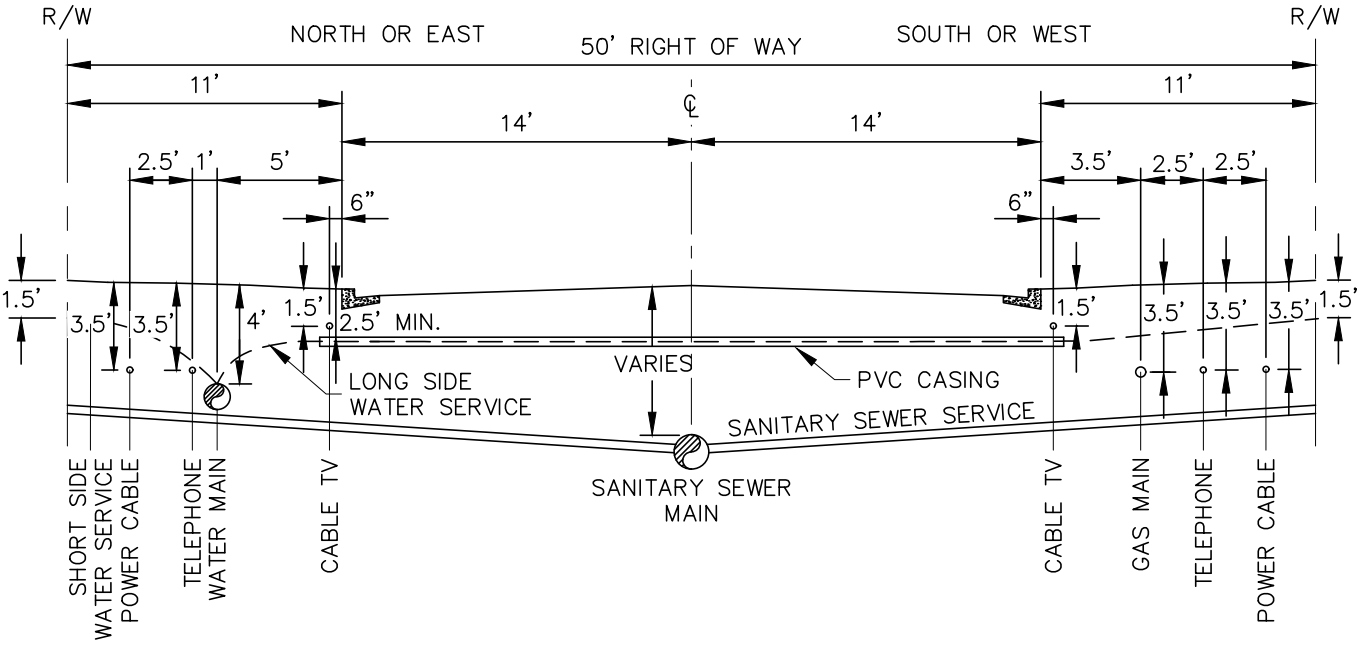

NOTE:

1. ON ALL UNCURBED STREET, UTILITY LOCATIONS SHALL BE AT THE SAME DISTANCES FROM ℄ AS SHOWN.
2. WATER MAIN, SANITARY SEWER MAIN, AND LONGSIDE WATER SERVICE SHALL BE LOCATED AS SHOWN. ALL OTHER UTILITIES WILL BE COORDINATED WITH THE APPLICABLE UTILITY.

CITY OF DAWSONVILLE	
DETAIL TITLE	DETAIL NO.
UNDERGROUND UTILITIES LOCATIONS	1.1

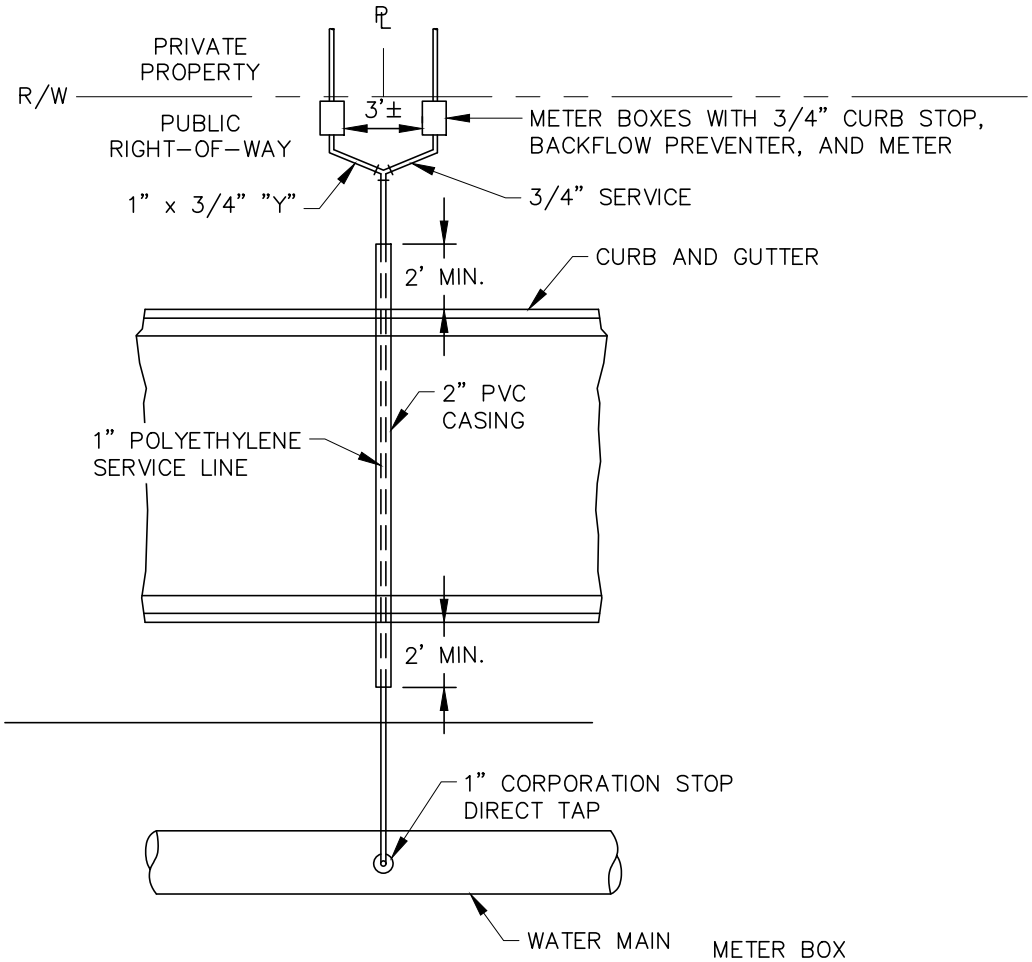

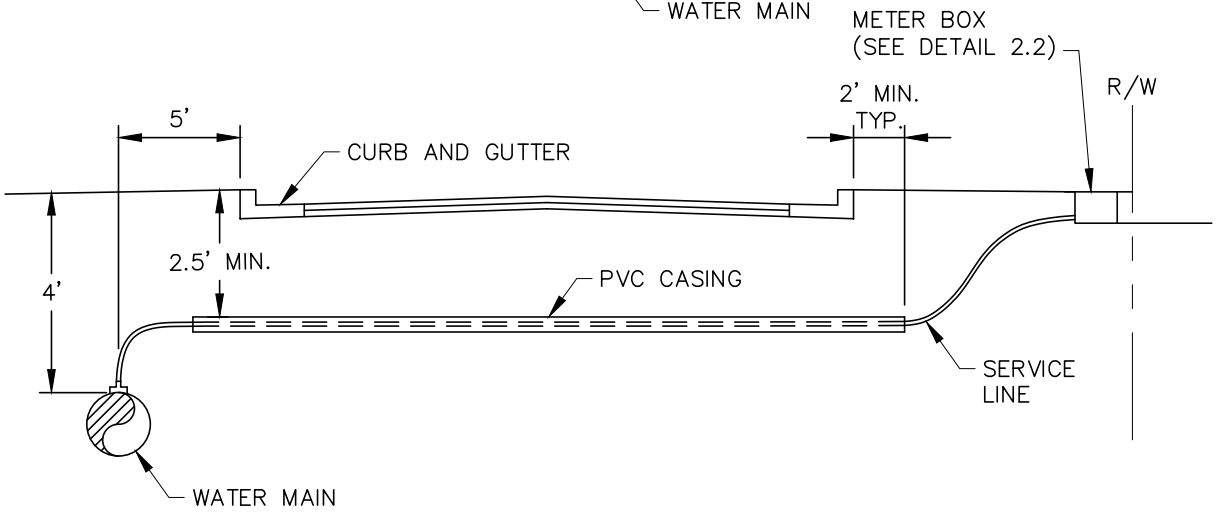

CITY OF DAWSONVILLE	
DETAIL TITLE	DETAIL NO.
LONG SIDE SERVICE	2.1

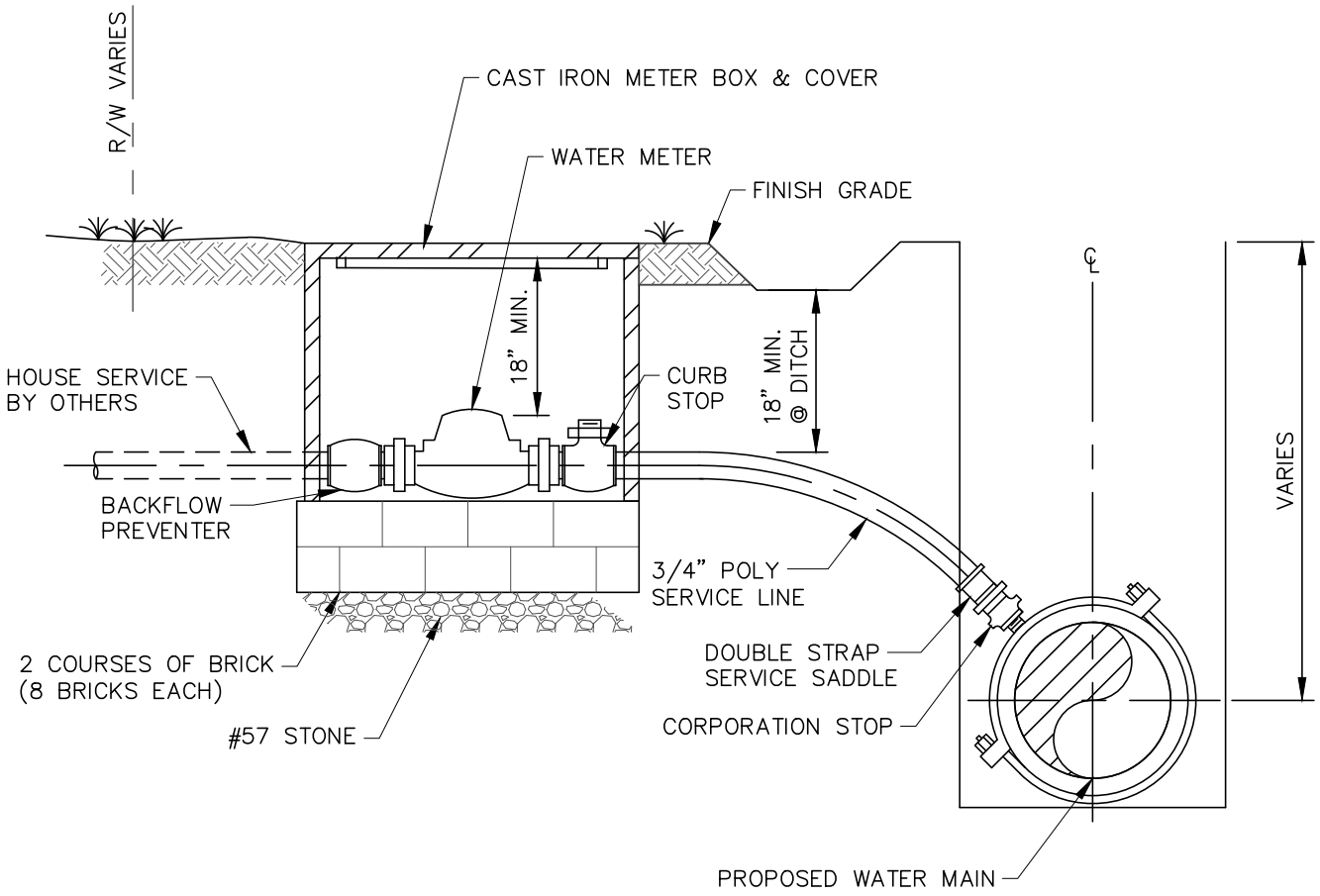

NOTE:

INSTALLATION SHALL ALLOW ADEQUATE ROOM TO REMOVE AND/OR REPAIR METER.

CITY OF DAWSONVILLE	
DETAIL TITLE	DETAIL NO.
SHORT SIDE SERVICE	3.1

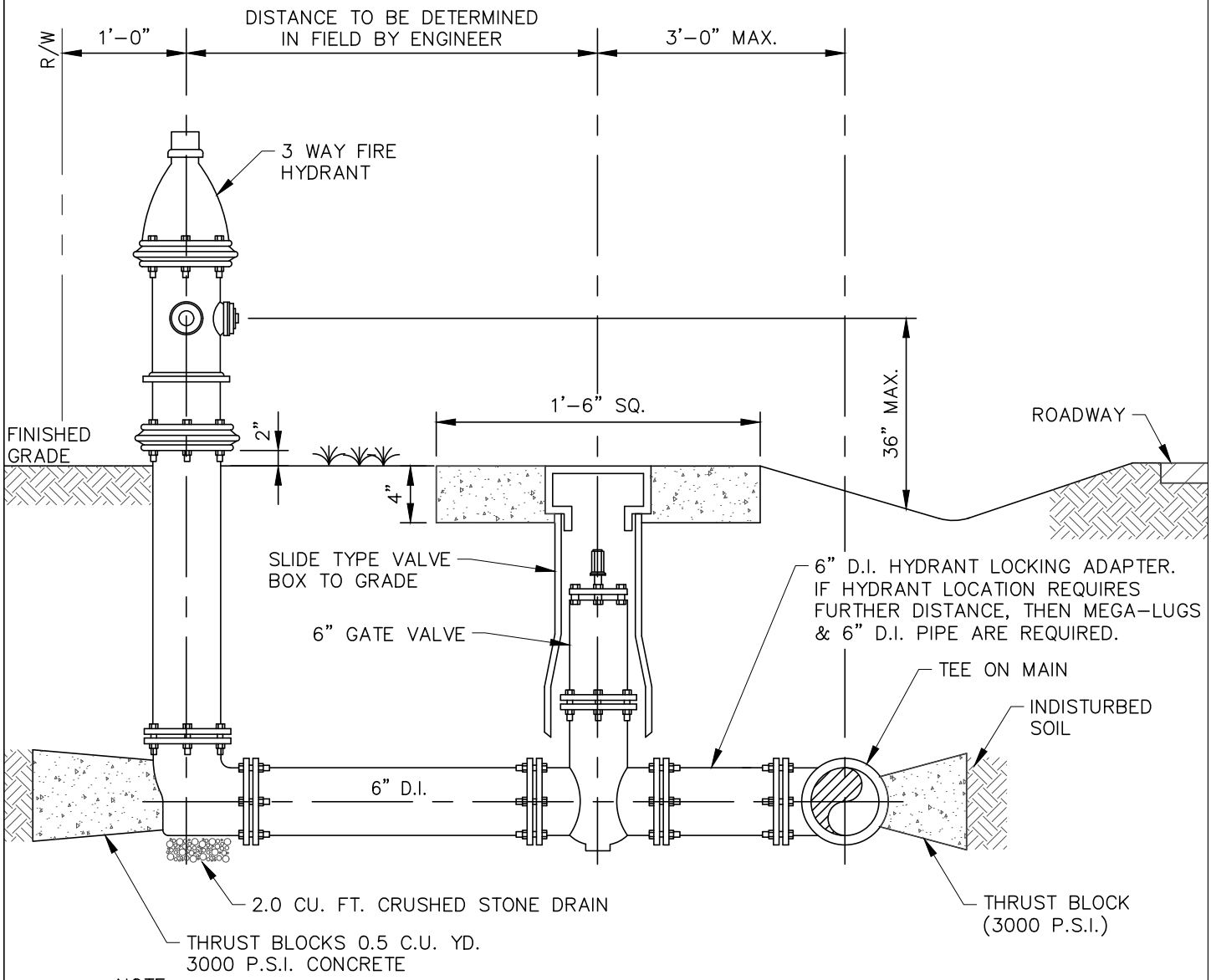

NOTE:

1. THREADED STAINLESS STEEL ROD MAY BE USED IN LIEU OF THRUST BLOCKING.
2. HYDRANT AND VALVE BOX SHALL BE SET PLUMB.
3. HYDRANT DRAIN HOLE AND ALL BOLTS SHALL BE KEPT FREE OF ANY CONCRETE.
4. VALVE BOX AND COLLAR SHALL BE IN ACCORDANCE WITH STANDARD 15.01.
5. ALL MATERIAL AND CONSTRUCTION SHALL BE IN ACCORDANCE WITH THE SPECIFICATIONS.
6. FIRE HYDRANTS, VALVES & VALVE BOXES SHALL NOT BE LOCATED IN DITCH LINE.
7. ALL FIRE HYDRANT VALVES ARE TO HAVE 4 1/2" OPENINGS.
8. CONCRETE COLLAR REQUIRED. WHERE VALVE BOX IS NOT LOCATED IN PAVED AREA.

CITY OF DAWSONVILLE	
DETAIL TITLE	DETAIL NO.
TYPICAL FIRE HYDRANT DETAIL	4.1

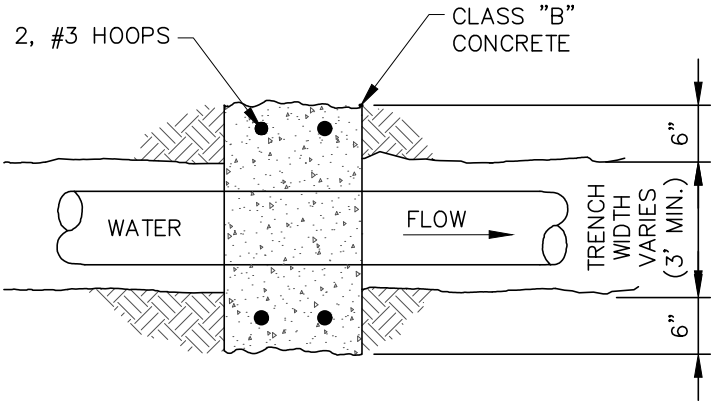

PLAN

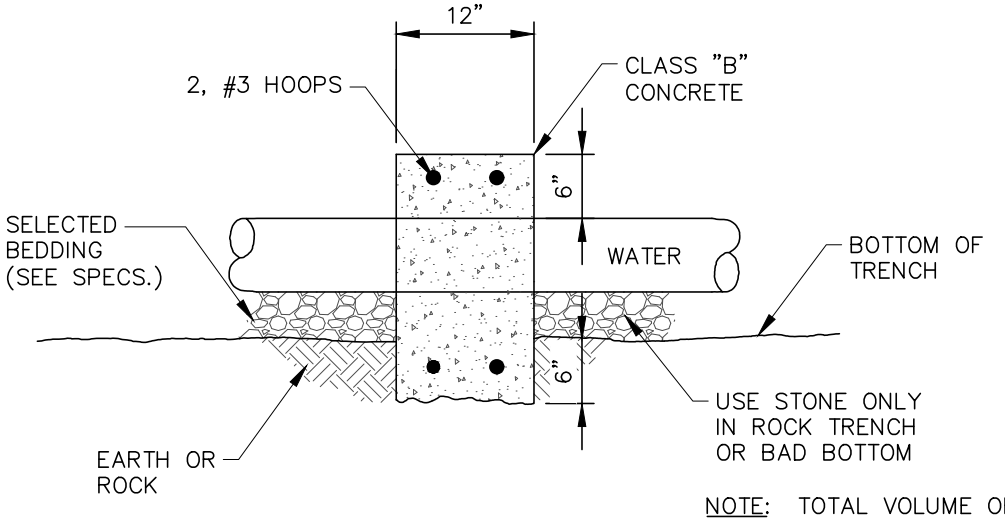

SECTION

NOTE: TOTAL VOLUME OF CONCRETE SHALL BE MINIMUM 10 CU. FT.

CITY OF DAWSONVILLE	
DETAIL TITLE	DETAIL NO.
TYPICAL CONCRETE ANCHOR	5.1

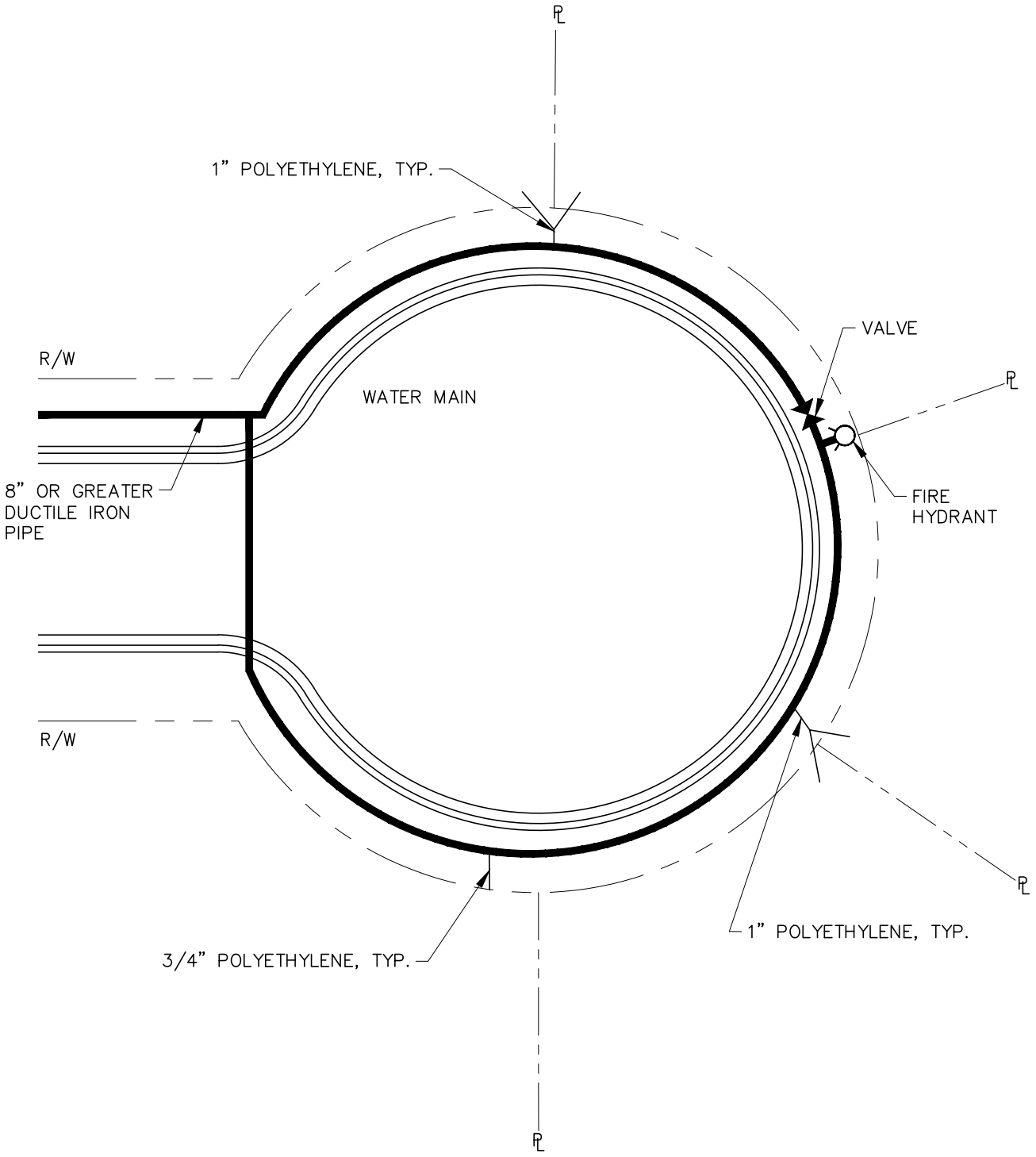

CITY OF DAWSONVILLE	
DETAIL TITLE	DETAIL NO.
FIRE HYDRANT IN CUL-DE-SAC	6.1

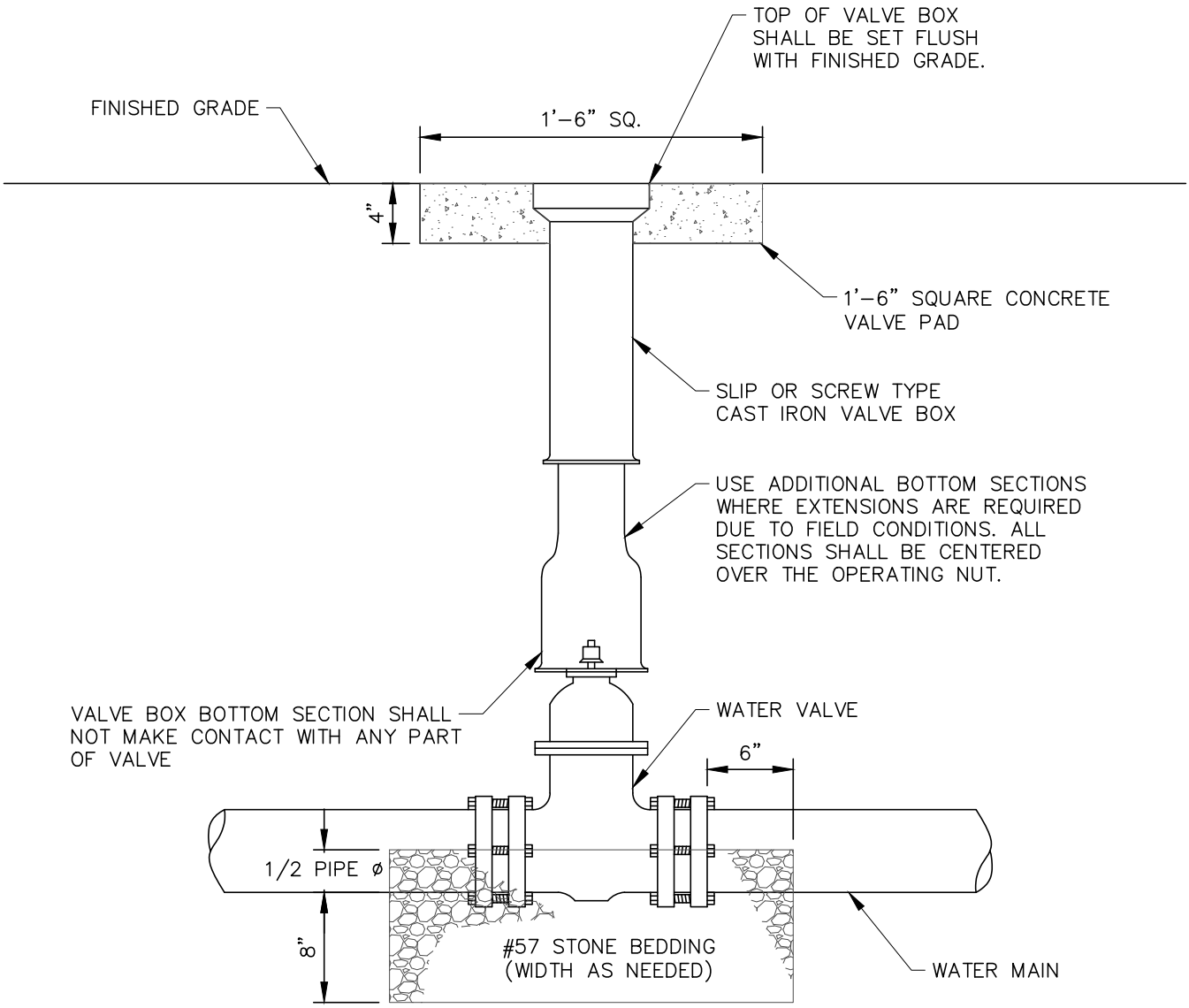

NOTE: VALVE BOX SHALL NOT BE SET IN DEPRESSED AREA.

CITY OF DAWSONVILLE	
DETAIL TITLE	DETAIL NO.
VALVE BOX DETAIL	7.1

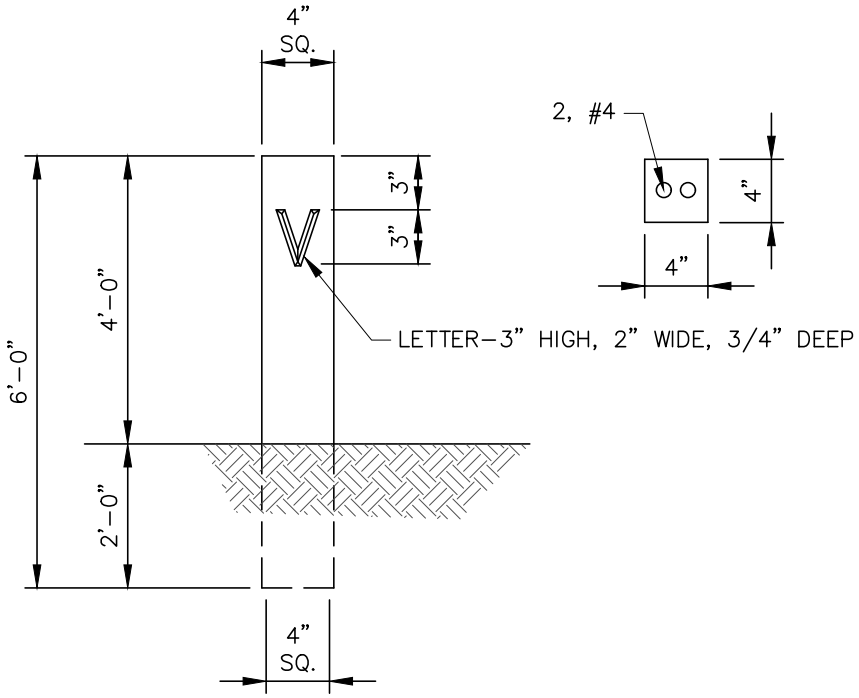

NOTE:

1. #5 x 2'-9" REBAR TO BE CAST IN CENTER.
2. COBCRETE SHALL BE MIN. 3,000 PSI W/ MAX. AGGREGATE SIZE OF 1/2".
3. VALVE MARKERS TO BE LOCATED BY THE ENGINEER.

CITY OF DAWSONVILLE	
DETAIL TITLE	DETAIL NO.
VALVE MARKER POST	7.2

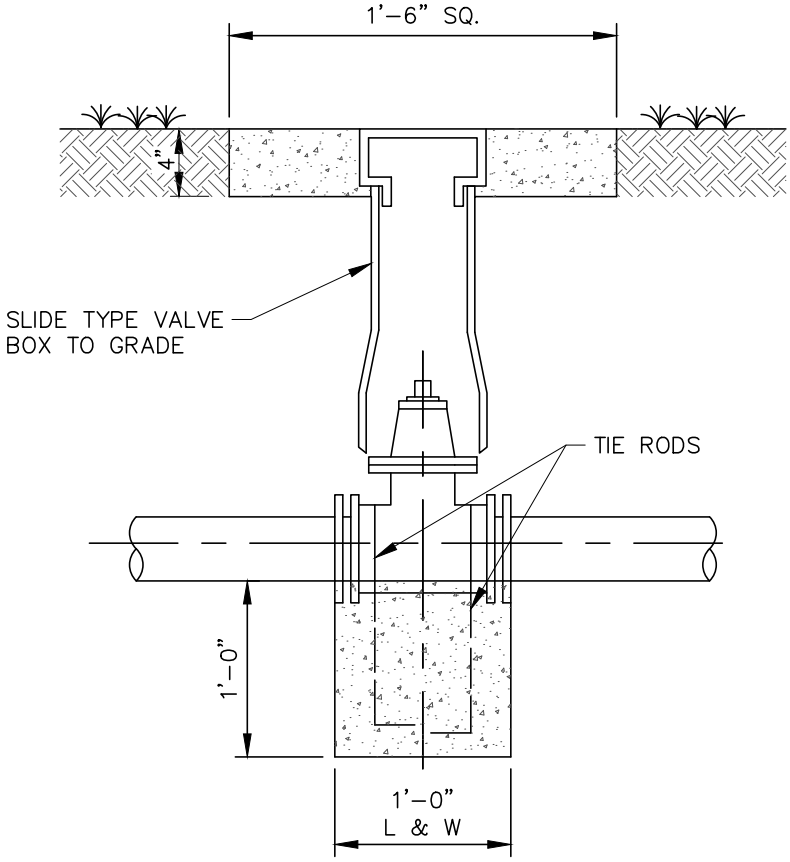

CITY OF DAWSONVILLE	
DETAIL TITLE	DETAIL NO.
VALVE ANCHOR	7.3

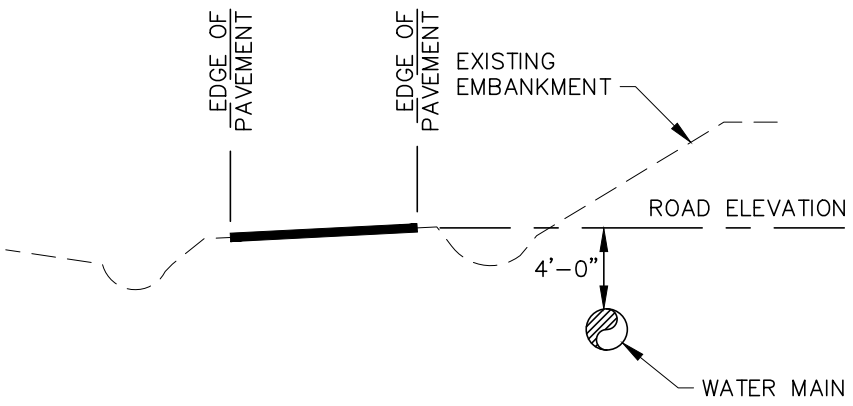

NOTE: UNLESS OTHERWISE INDICATED ON PLANS MINIMUM SOIL COVER ABOVE PIPE IS 4 FEET.

WHERE GROUND ELEVATION IS ABOVE ROAD ELEVATION

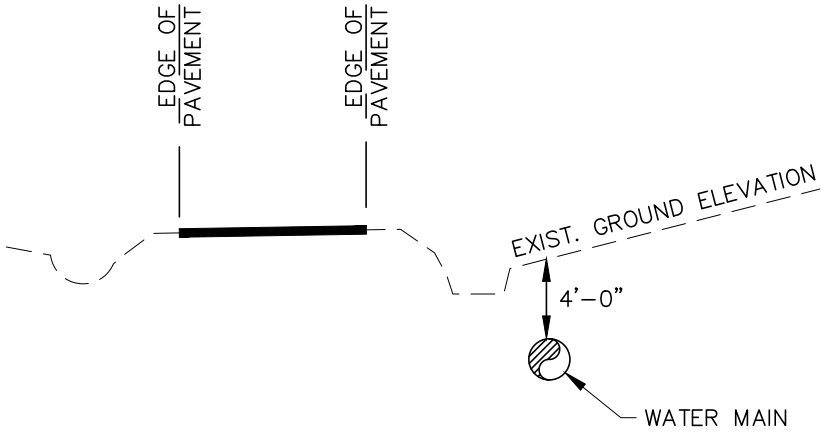

NOTE: UNLESS OTHERWISE INDICATED ON PLANS MINIMUM SOIL COVER ABOVE PIPE IS 4 FEET.

WHERE GROUND ELEVATION IS BELOW ROAD ELEVATION

CITY OF DAWSONVILLE	
DETAIL TITLE	DETAIL NO.
PIPE DEPTH AT EDGE OF PAVEMENT	8.1

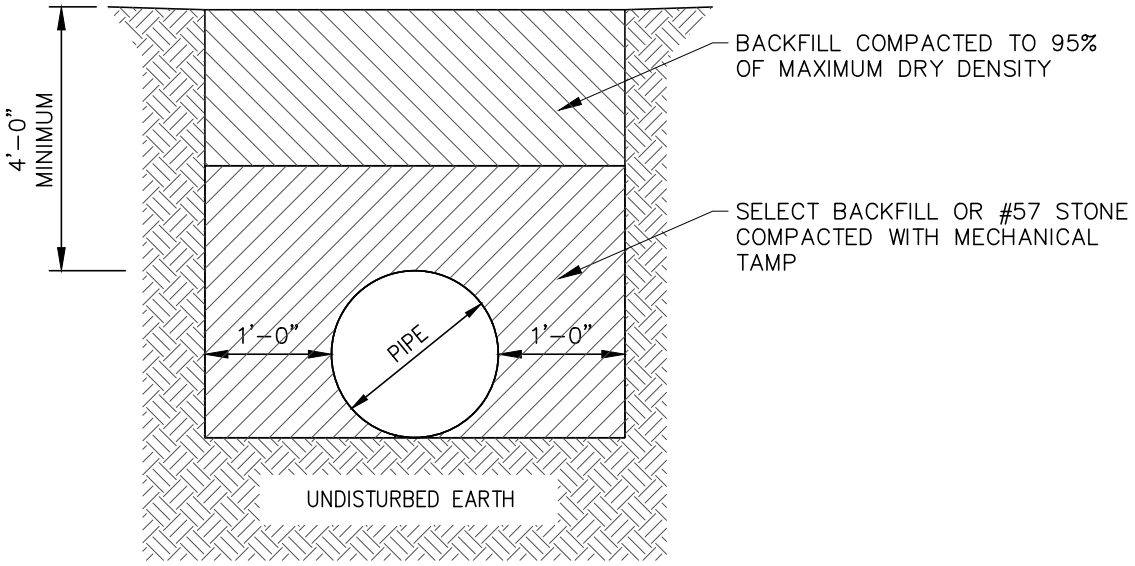

NOTE:

1. UNSUITABLE SOILS ENCOUNTED IN BOTTOM OF EXCAVATED TRENCH SHALL BE EXCAVATED & REPLACED WITH #57 STONE.
2. ONLY SUITABLE SOIL SHALL BE USED AS BACKFILL.

CITY OF DAWSONVILLE	
DETAIL TITLE	DETAIL NO.
TYPICAL DUCTILE IRON WATER PIPE BEDDING	9.1

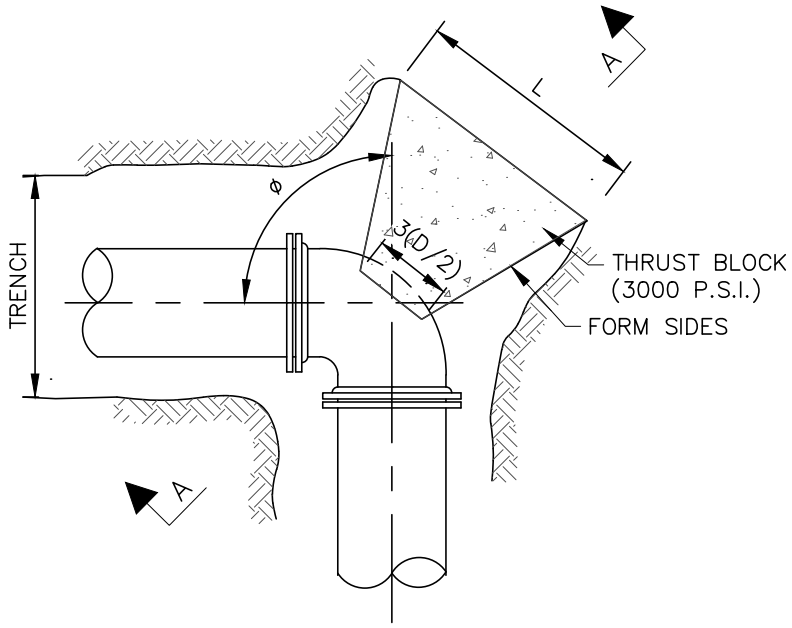

BEND PLAN

MINIMUM
DIMENSIONS FOR CONCRETE BLOCKING

BEND	PIPE SIZE	5D/2	L	3D/2	W
11 ¼°	4"	10"	9"	6"	8"
	6"	15"	14"	9"	12"
	8"	20"	21"	12"	14"
	10"	25"	28"	15"	16"
	12"	30"	32"	18"	20"
	16"	40"	41"	24"	27"
	24"	60"	62"	36"	41"
22 ½°	4"	10"	9"	6"	8"
	6"	15"	14"	9"	12"
	8"	20"	21"	12"	14"
	10"	30"	28"	15"	16"
	12"	40"	32"	18"	20"
	16"	40"	41"	24"	27"
	24"	60"	62"	36"	41"
45°	4"	10"	14"	6"	10"
	6"	15"	23"	9"	14"
	8"	20"	31"	12"	18"
	10"	30"	40"	15"	22"
	12"	40"	48"	18"	26"
	16"	40"	64"	24"	35"
	24"	60"	96"	36"	52"
90°	4"	10"	19"	6"	14"
	6"	15"	29"	9"	20"
	8"	20"	40"	12"	26"
	10"	30"	50"	15"	32"
	12"	40"	61"	18"	38"
	16"	40"	82"	24"	50"
	24"	60"	153"	36"	60"
TEE	4"	10"	15"	6"	12"
	6"	15"	23"	9"	18"
	8"	20"	31"	12"	24"
	10"	30"	38"	15"	30"
	12"	40"	46"	18"	36"
	16"	40"	61"	24"	48"
	24"	60"	92"	36"	71"

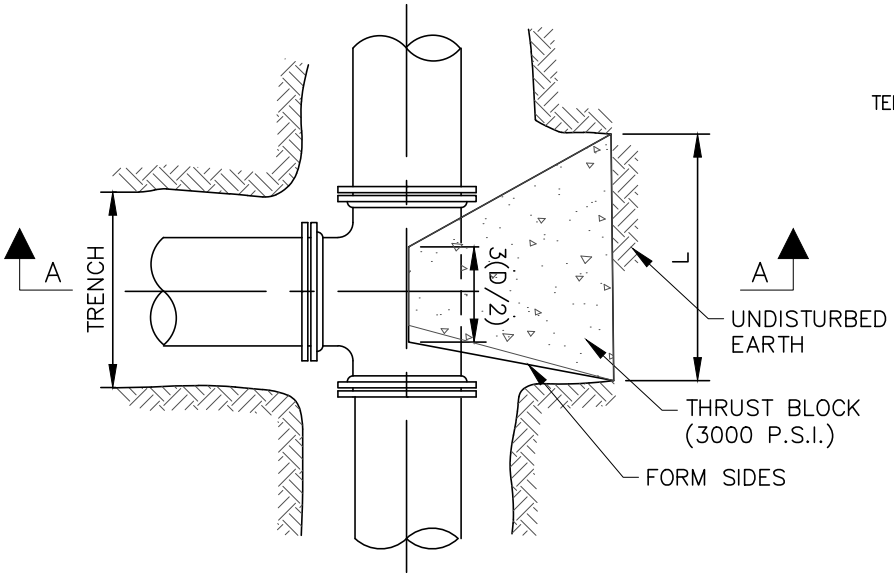

TEE PLAN

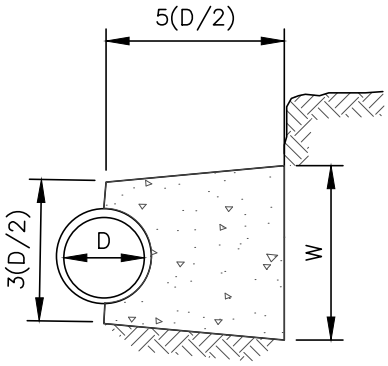

SECTION A–A

CITY OF DAWSONVILLE	
DETAIL TITLE	DETAIL NO.
THRUST BLOCK DIMENSIONS	10.1

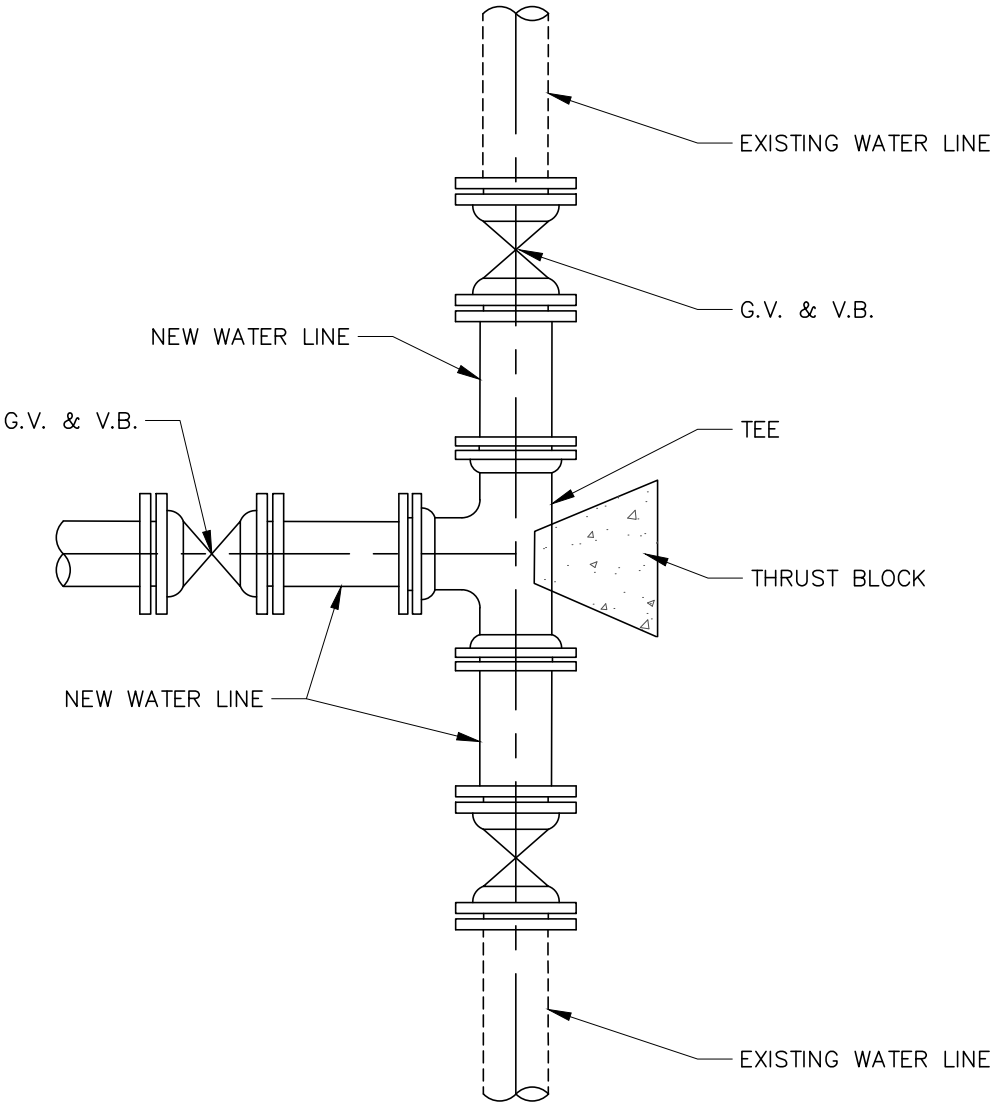

CITY OF DAWSONVILLE	
DETAIL TITLE	DETAIL NO.
CONNECT TO EXISTING WATER LINE	10.2

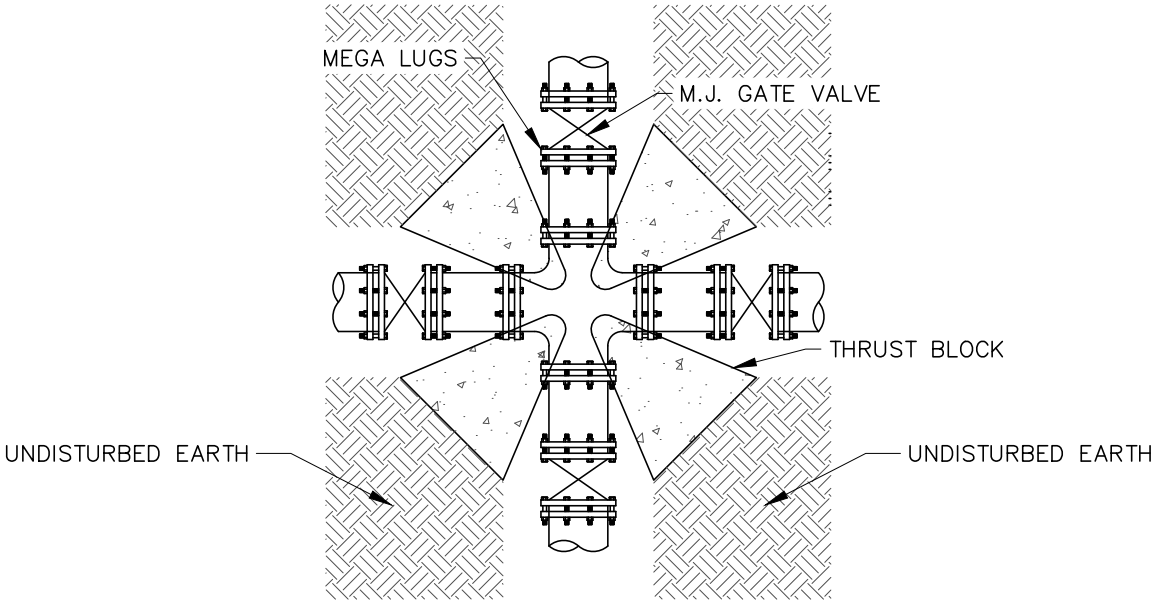

CROSS INSTALLATION

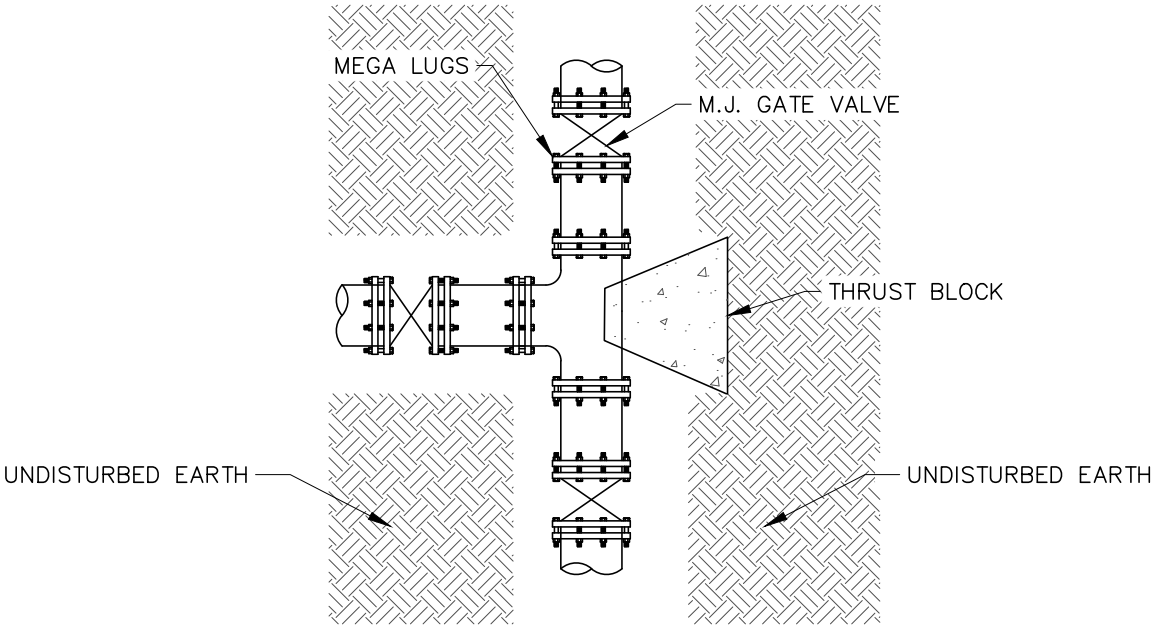

TEE INSTALLATION

NOTE:
1. ALL CONNECTIONS SHALL BE RESTRAINED JOINT USING MEGA LUGS.
2. BOLTS/NUTS SHALL BE PROTECTED FROM CONCRETE COVERAGE.

CITY OF DAWSONVILLE	
DETAIL TITLE	DETAIL NO.
THRUST RESTRAINT AT FITTING	11.1

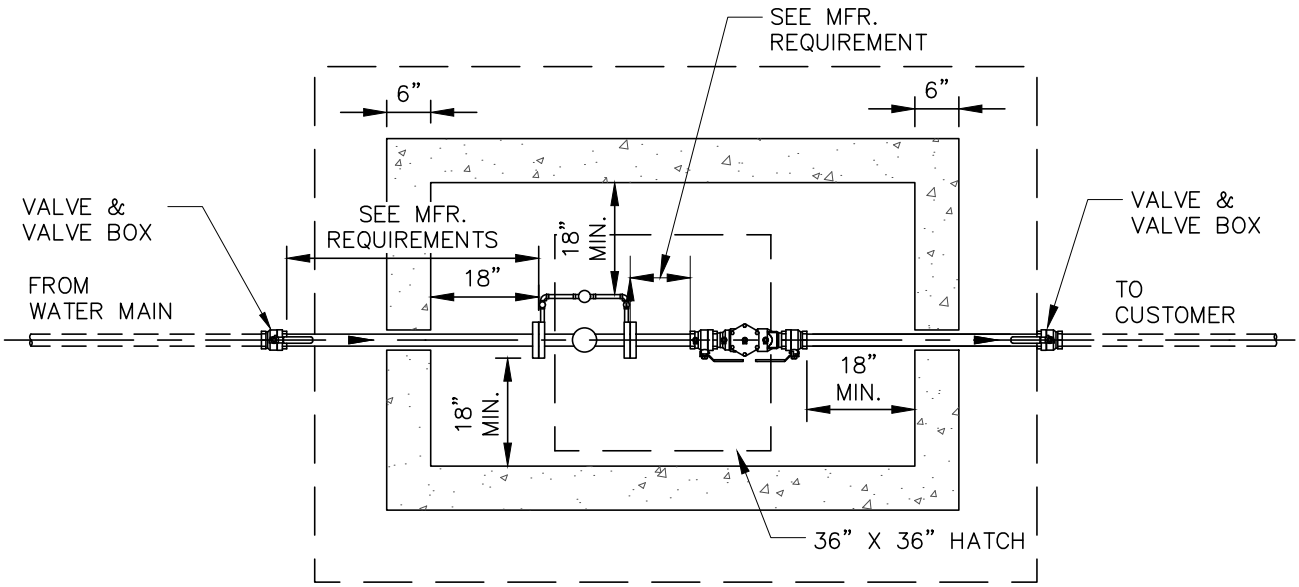

PLAN VIEW

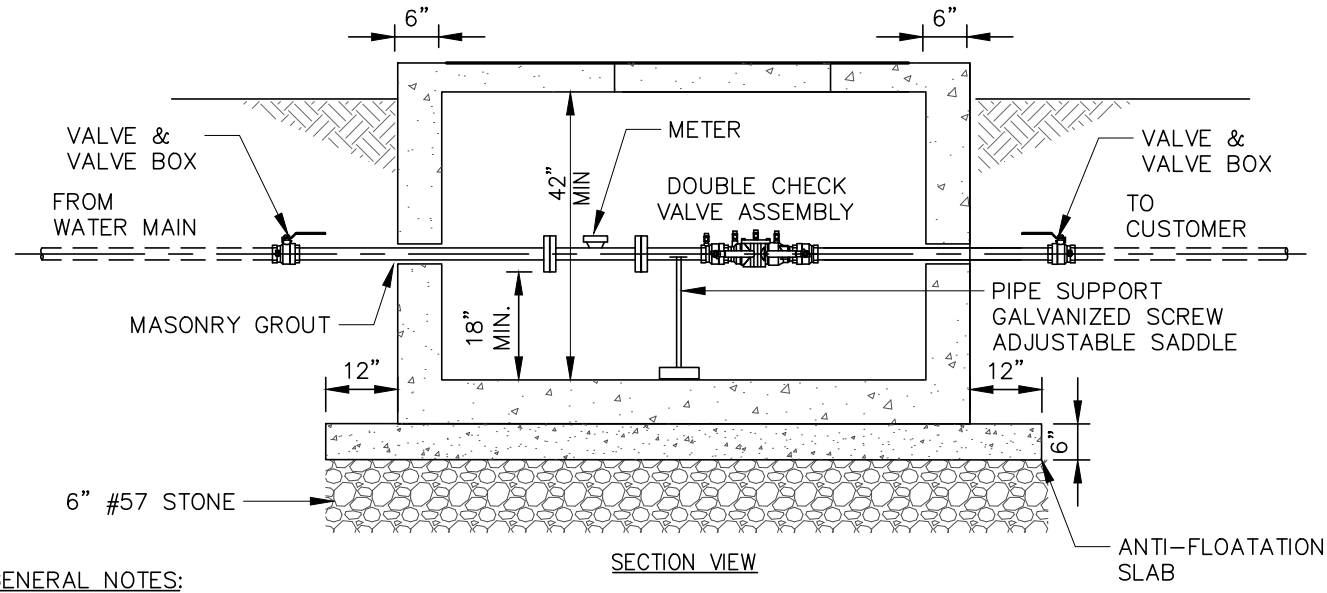

SECTION VIEW

GENERAL NOTES:

1. LOCATION OF PIT SHALL BE DETERMINED IN THE FIELD BY THE ENGINEER.
2. ALL PIPING SHALL HAVE 18" OF CLEARANCE ON ALL SIDES.
3. CONTRACTOR SHALL SUPPORT ALL PIPING INSIDE PIT AS REQUIRED (2 PLACES).
4. CONTRACTOR MAY USE PRECAST CONCRETE OR POLYMER REINFORCED CONCRETE VAULT IN LIEU OF CAST IN PLACE VAULT.
5. IF POLYMER REINFORCED CONCRETE VAULTS ARE USED, THEY SHALL BE ANSI TIER 22 RATED AND HAVE ADEQUATE PROTECTION AGAINST BUOYANCY.
6. CONTRACTOR MAY INSTALL METER AND BACKFLOW PREVENTER IN TWO SEPARATE VAULTS.
7. ALL EXCAVATION INCLUDING TRENCHING, BORE PITS, ETC., SHALL BE BACKFILLED AT THE END OF EACH WORK DAY.
8. STRAIGHT PIPE REQUIREMENTS UPSTREAM AND DOWNSTREAM OF METER SHALL BE AS SPECIFIED BY THE METER MANUFACTURER.
9. VAULT SHALL HAVE 12" ø DRAIN.

CITY OF DAWSONVILLE	
DETAIL TITLE	DETAIL NO.
2" METER	12.1

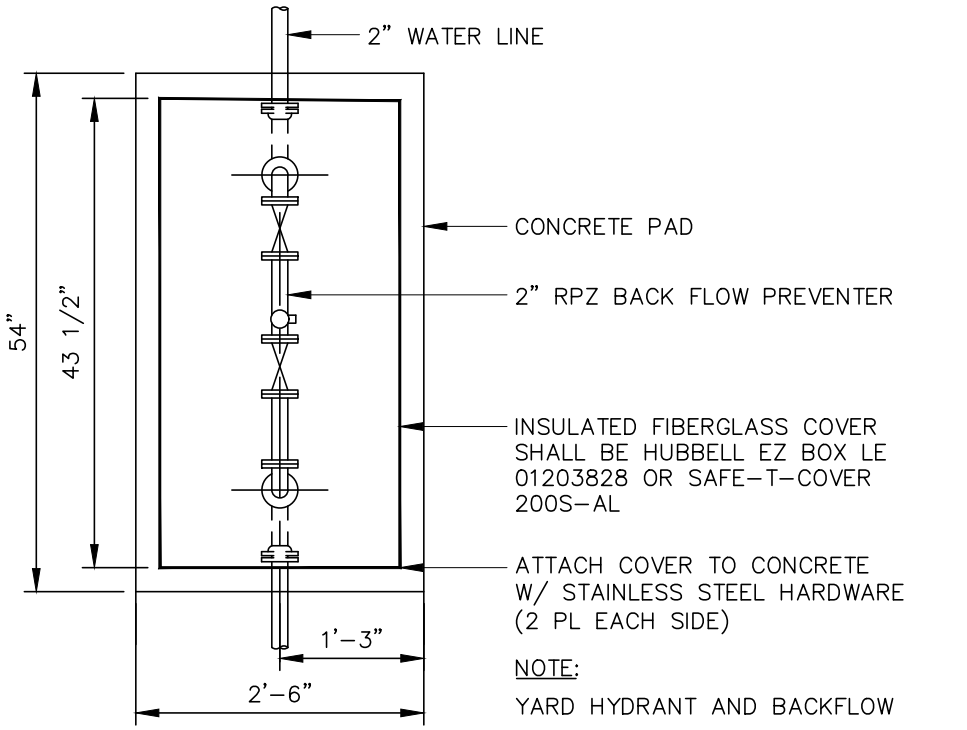

NOTE:

YARD HYDRANT AND BACKFLOW PREVENTER ARE REQUIRED FOR EACH PUMP STATION.

PLAN

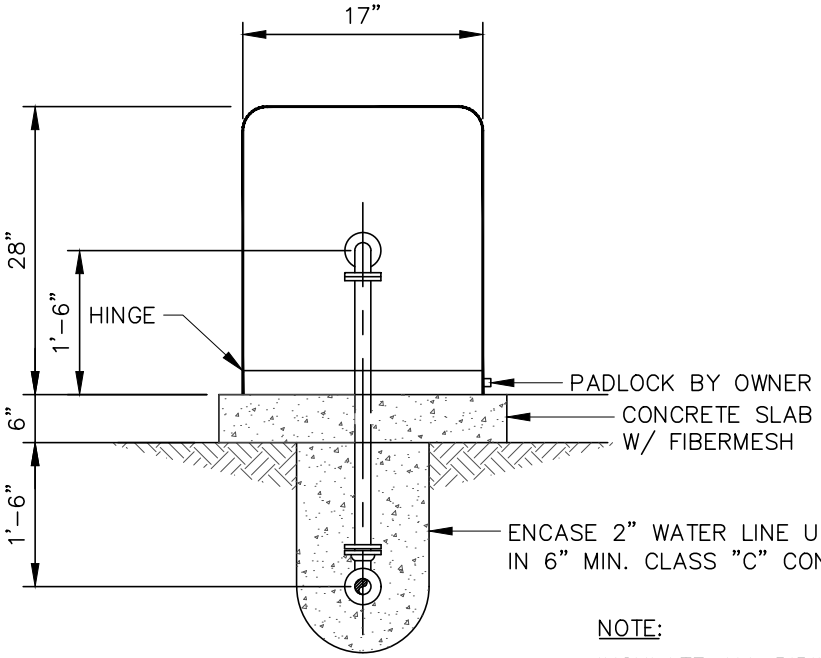

NOTE:

INSULATE ALL PIPING ABOVE GRADE.

SECTION

CITY OF DAWSONVILLE	
DETAIL TITLE	DETAIL NO.
2" RPZ BACK FLOW PREVENTER DETAIL	12.2

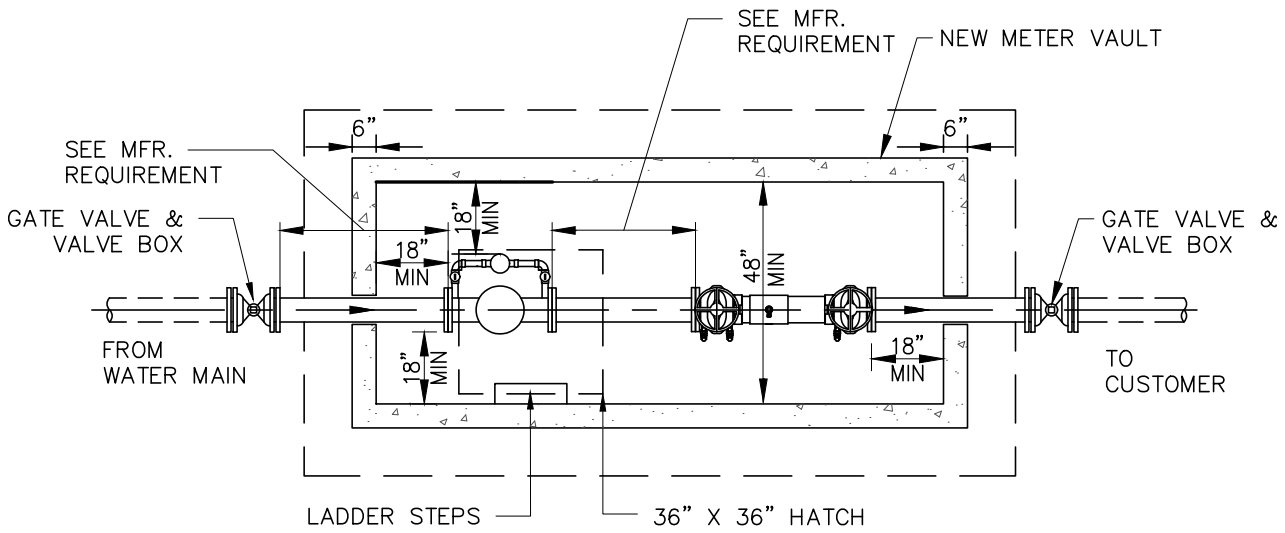

PLAN VIEW

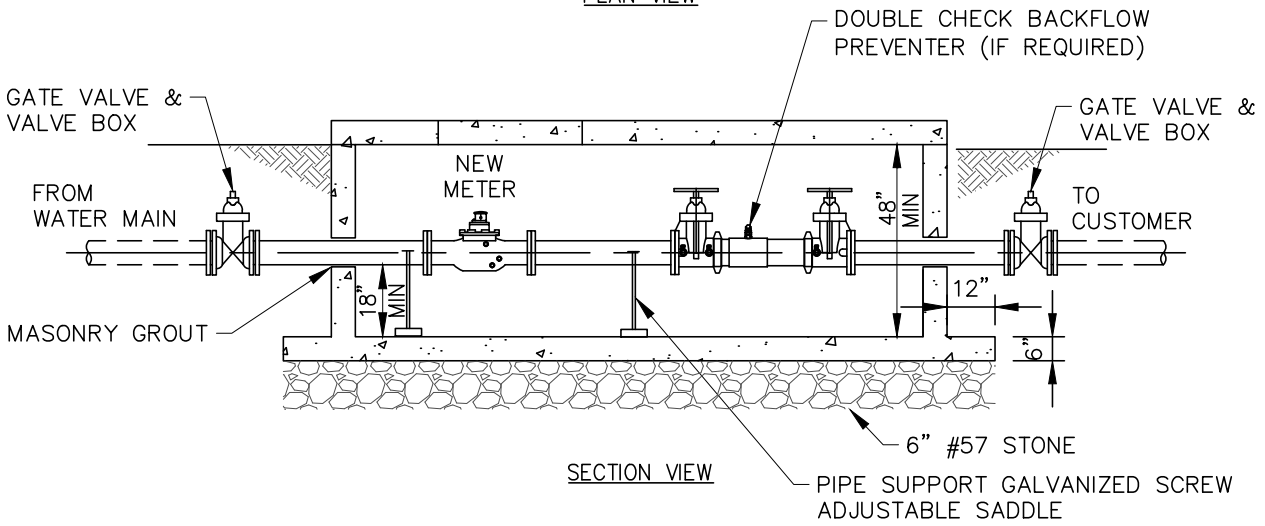

SECTION VIEW

GENERAL NOTES:

1. LOCATION OF PIT SHALL BE DETERMINED IN THE FIELD BY THE ENGINEER.
2. ALL PIPING SHALL BE DUCTILE IRON.
3. ALL PIPING SHALL HAVE 18 INCHES OF CLEARANCE ON ALL SIDES.
4. CONTRACTOR SHALL SUPPORT ALL PIPING INSIDE PIT AS REQUIRED (2 PLACES).
5. CONTRACTOR MAY USE PRECAST CONCRETE OR POLYMER REINFORCED CONCRETE VAULT IN LIEU OF CAST IN PLACE VAULT.
6. IF POLYMER REINFORCED CONCRETE VAULTS ARE USED, THEY SHALL BE ANSI TIER 22 RATED AND HAVE ADEQUATE PROTECTION AGAINST BUOYANCY.
7. CONTRACTOR MAY INSTALL METER AND BACKFLOW PREVENTER IN TWO SEPARATE VAULTS.
8. ALL EXCAVATION INCLUDING TRENCHING, BORE PITS, ETC., SHALL BE BACKFILLED AT THE END OF EACH WORK DAY.
9. STRAIGHT PIPE REQUIREMENTS UPSTREAM AND DOWNSTREAM OF METER SHALL BE AS SPECIFIED BY THE METER MANUFACTURER.
10. VAULT SHALL HAVE 12" ø DRAIN.

CITY OF DAWSONVILLE	
DETAIL TITLE	DETAIL NO.
3" DOMESTIC METER AND LARGER	13.1

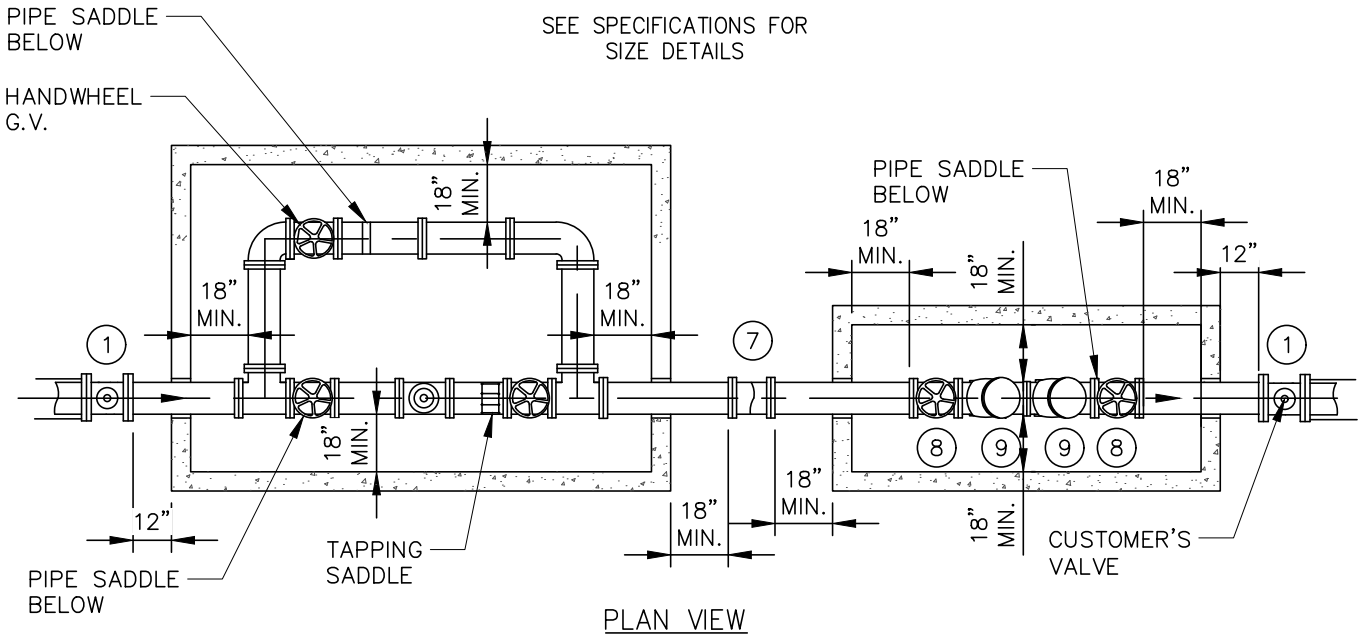

PLAN VIEW

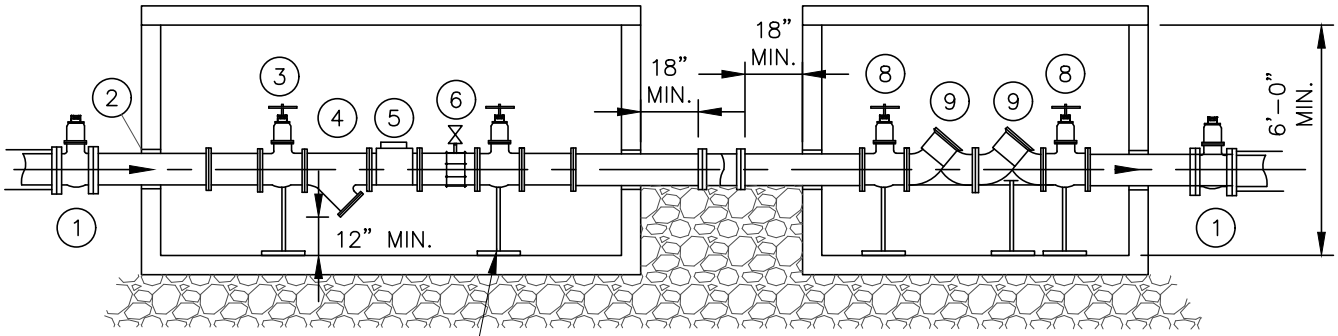

PIPE SUPPORRT (SCREW ADJUSTABLE SADDLE GALVANIZED), TYP.

SECTION VIEW

1. MECHANICAL JOINT x FLANGE GATE VALVE W/ NUT OPERATOR.
2. LINK-SEAL (TYPICAL)
3. HANDWHEEL GATE VALVE
4. STRAINER
5. METER
6. TAPPING SADDLE (LOCATE TAP A MIN. 3 PIPE DIAMETERS DOWNSTREAM OF METER) 2" 1/4 TURN BRASS BALL VALVE
7. M.J. SLEEVE WITHE MEGA LUG
8. OS & Y GATE VALVES
9. DOUBLE CHECK VALVE ASSEMBLY (WATTS 757)

NOTE:

1. PIPE TAPS SHALL BE PERFORMED USING A WATER COOLED CORE DEVICE PIPE SHALL NOT BE TAPPED USING CUTTING TORCH.
2. METER AND CHECK BACK FLOW PREVENTER MAY BE IN SAME VAULT.

CITY OF DAWSONVILLE	
DETAIL TITLE	DETAIL NO.
FIRE METER	14.1

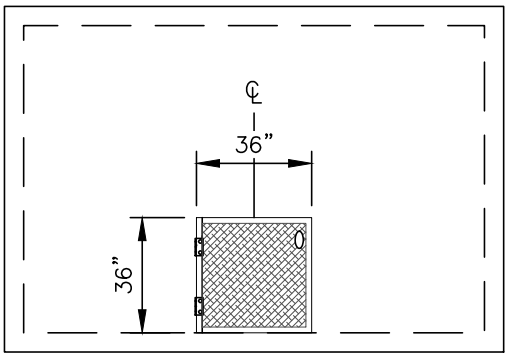

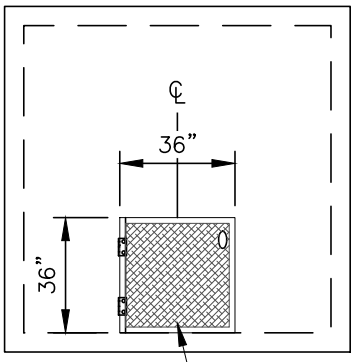

36" x 36"
ALUMINUM ACCESS
HATCH, TYP.

TOP VIEW

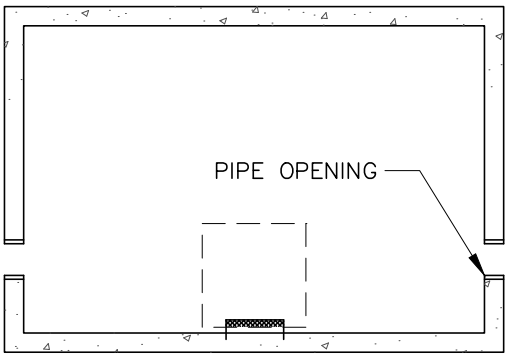

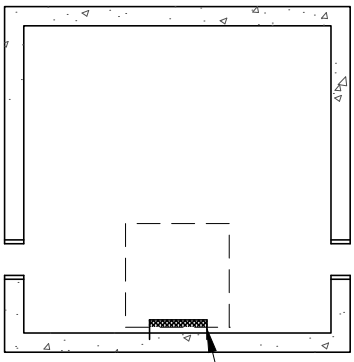

MANHOLE STEPS
@ 15" O.C.

PLAN VIEW

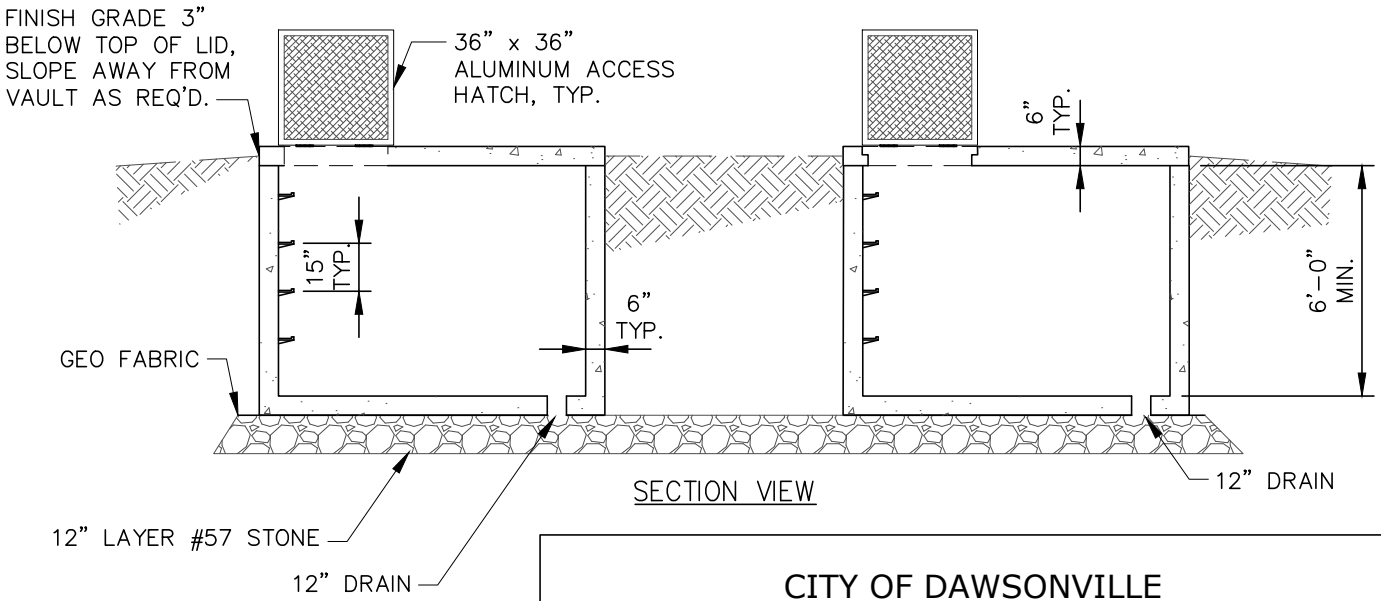

SECTION VIEW

CITY OF DAWSONVILLE	
DETAIL TITLE	DETAIL NO.
FIRE METER VAULT	15.1

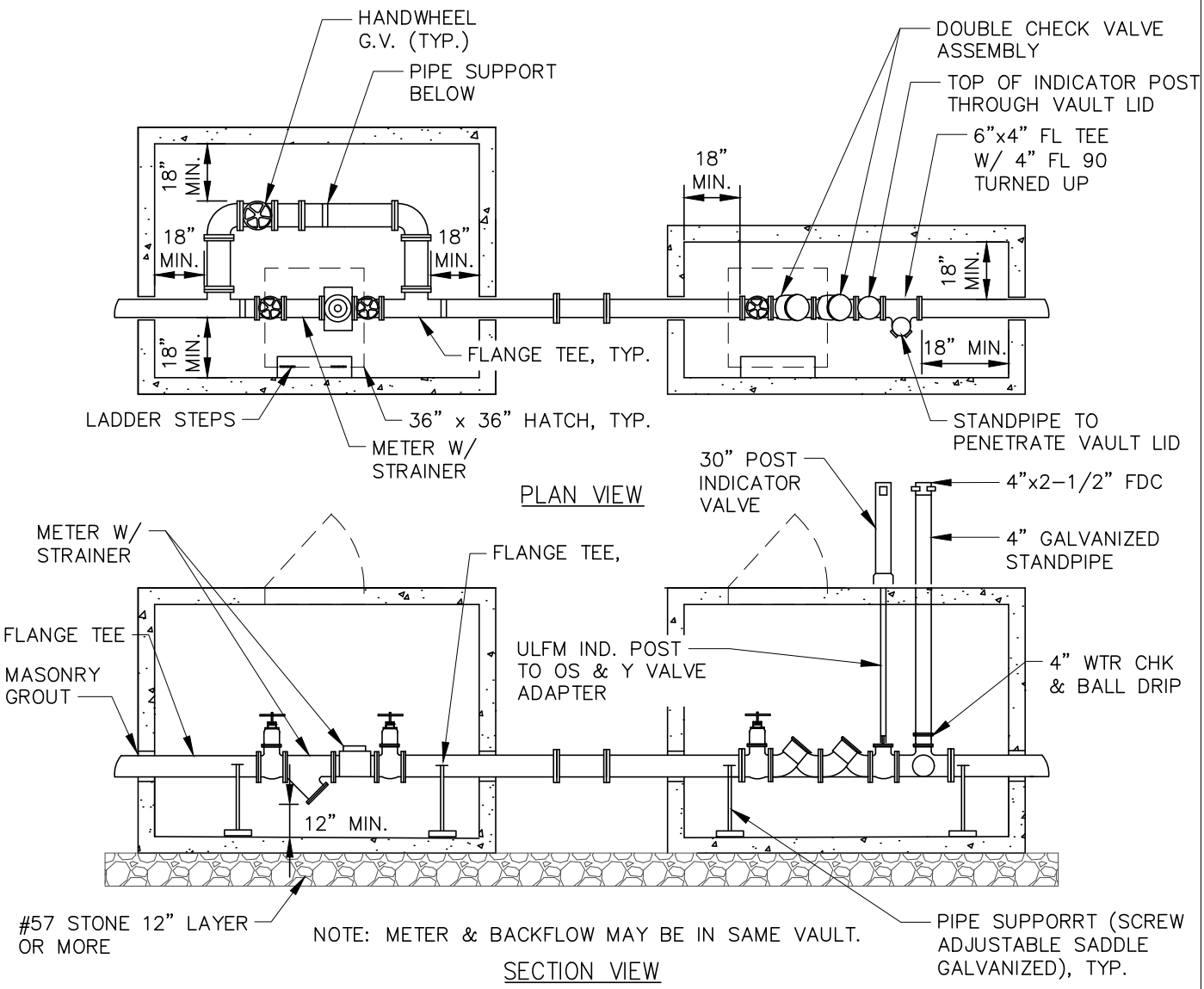

NOTE:

1. VAULT TO BE SIZED TO ALLOW 18" MIN. CLEARANCE AROUND ALL INSTALLED EQUIPMENT.
2. VAULT COATING TO BE
   A. BITUMINOUS TAR ON UNDERGROUND PORTION OF VAULT.
   B. ASSEMBLY TO BE COATED WITH SPECIAL NON-SKID EPOXY.
3. THE HATCHES SHALL BE CONSTRCUTED W/ 6" DEEP FRAME AND OF 1/4" DIAMOND PLATE ALUMINUM.
4. THE HATCHES SHALL BE REINFORCED FOR H-20 LOADING, AND SHALL HAVE A FALL-IN-PLACE HOLD-OPEN ARM AND STAINLESS STEEL SNAP LOCK.
5. HATCHES SHALL MEET ALL CURRENT ASTM STANDARDS.
6. SIX (6") INCH THICK PRECAST CONCRETE SHALL BE USED FOR CONSTRUCTION AS A MINIMUM.
7. 12" LAYER OF #57 STONE, 12" LARGER THAN FOOTPRINT OF VAULT.
8. VAULT SHALL HAVE 12" ø DRAIN.
9. POSITION HATCH OVER METER & ALIGN EDGE AGAINST VAULT INTERIOR WALL.

CITY OF DAWSONVILLE	
DETAIL TITLE	DETAIL NO.
FDC VAULT	16.1

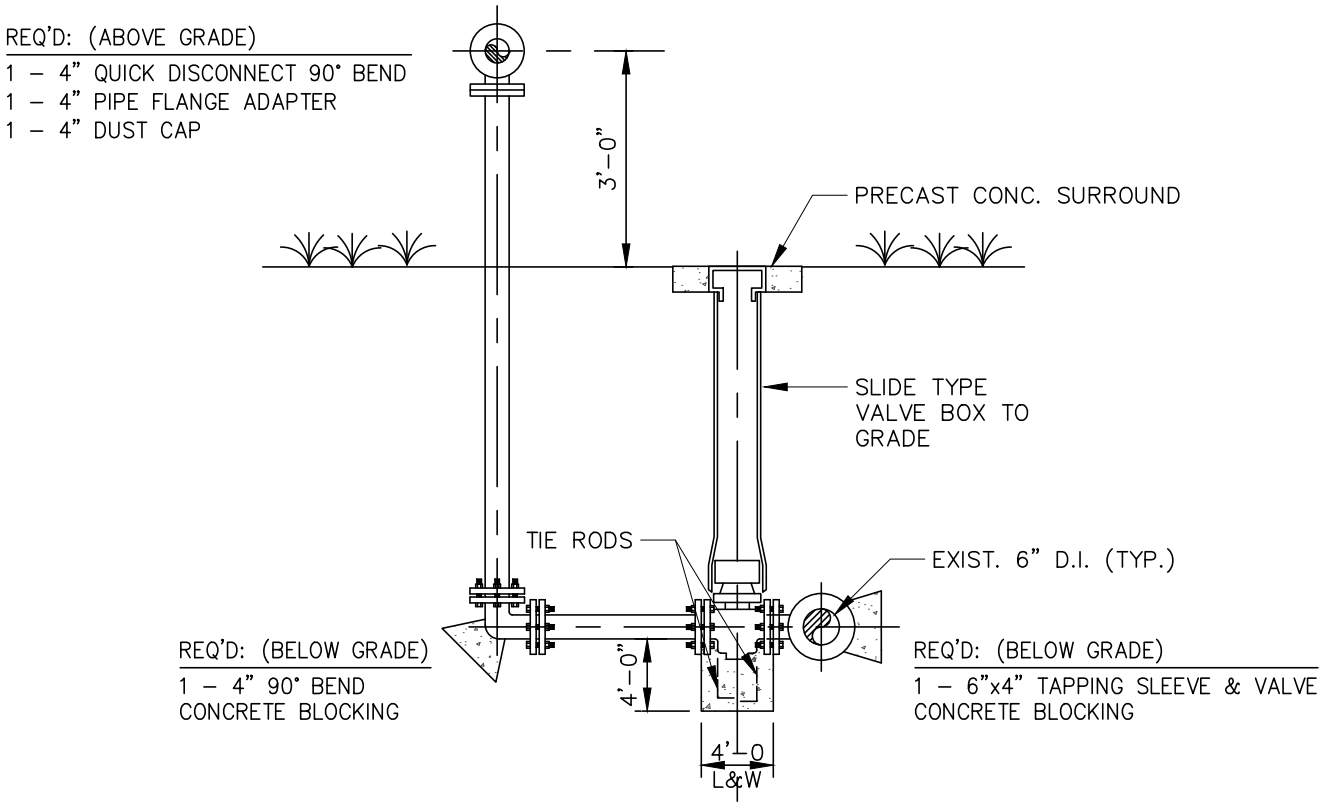

SECTION

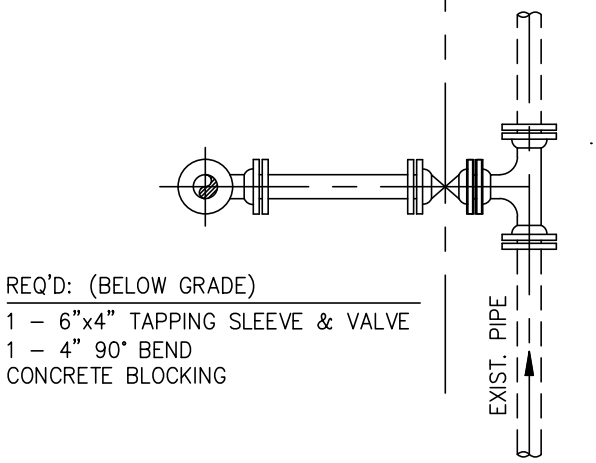

PLAN

CITY OF DAWSONVILLE	
DETAIL TITLE	DETAIL NO.
RAW SEWAGE PUMP STATION EMERGENCY BY-PASS CONNECTION	17.1

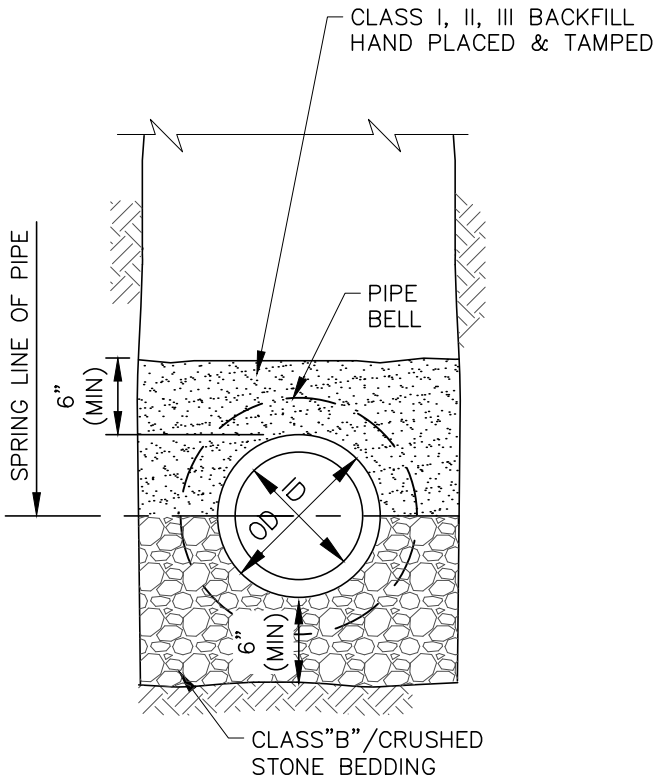

NOTE:

1. UNSUITABLE SOILS ENCOUNTERED IN BOTTOM OF EXCAVATED TRENCH SHALL BE EXCAVATED & REPLACED WITH #57 STONE.
2. ONLY SUITABLE SOIL SHALL BE USED AS BACKFILL.

CITY OF DAWSONVILLE	
DETAIL TITLE	DETAIL NO.
TYPICAL PVC SEWER PIPE BEDDING	18.1

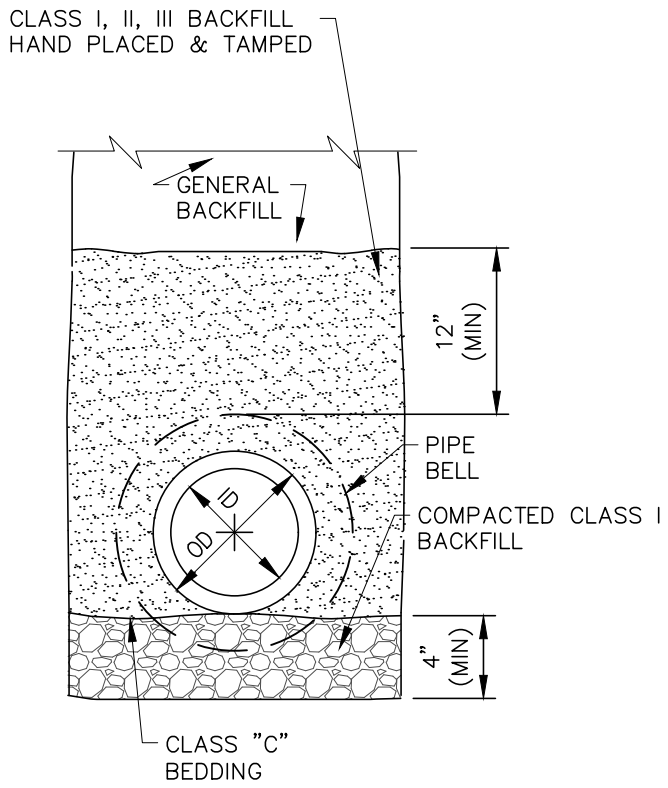

DUCTILE IRON

NOTE: APPLICABLE TO BOTH EARTH * ROCK TRENCHES

MAX. DEPTH OF COVER FOR DUCTILE IRON PIPE OF THE VARIOUS CLASSES & SIZES TO BE INSTALLED ARE AS FOLLOWS:

LAYING CONDITION – DUCTILE IRON

			MAX. DEPTH & COVER (FT.)	
			(1)	(2)
PIPE SIZE IN	THICK CLASS	NOMINAL THICK IN	FLAT BOT TRENCH	SELECTED MATERIAL
8	50	0.27	46	64
	51	0.30	61	81
	52	0.33	77	99

CITY OF DAWSONVILLE	
DETAIL TITLE	DETAIL NO.
TYPICAL DUCTILE IRON SEWER PIPE BEDDING	18.2

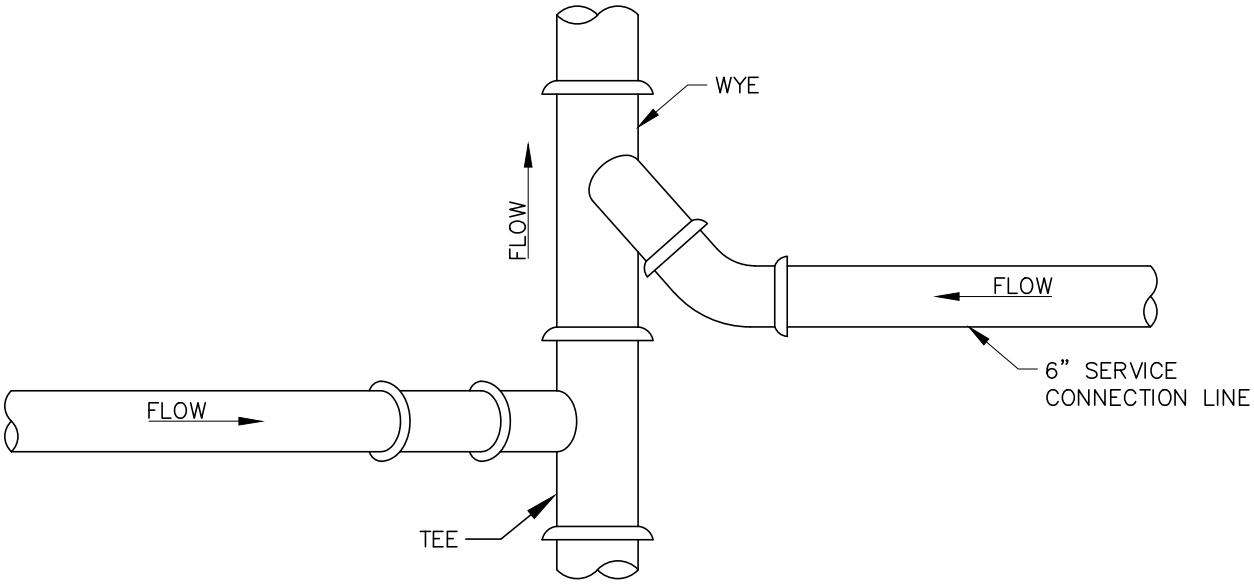

PLAN

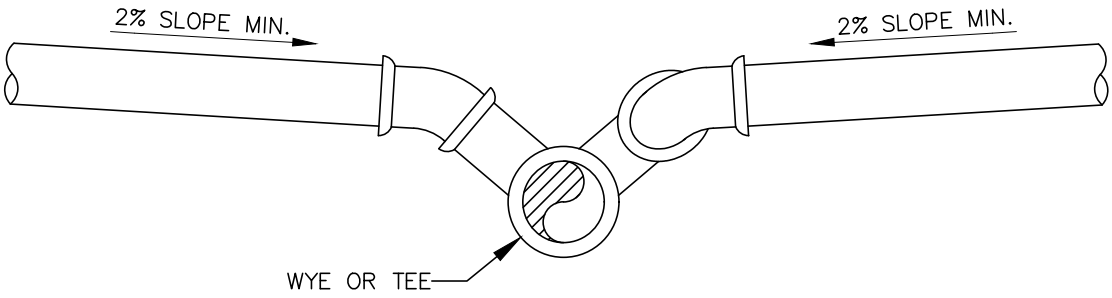

SECTION

NOTE:

1. CONNECTION TO NEW SEWER SHALL BE WITH TEE OR WYE.
2. NO TEES OR WYES ON SEWERS LARGER THAN 18" ø.

CITY OF DAWSONVILLE	
DETAIL TITLE	DETAIL NO.
SEWER LATERAL CONNECTION	19.1

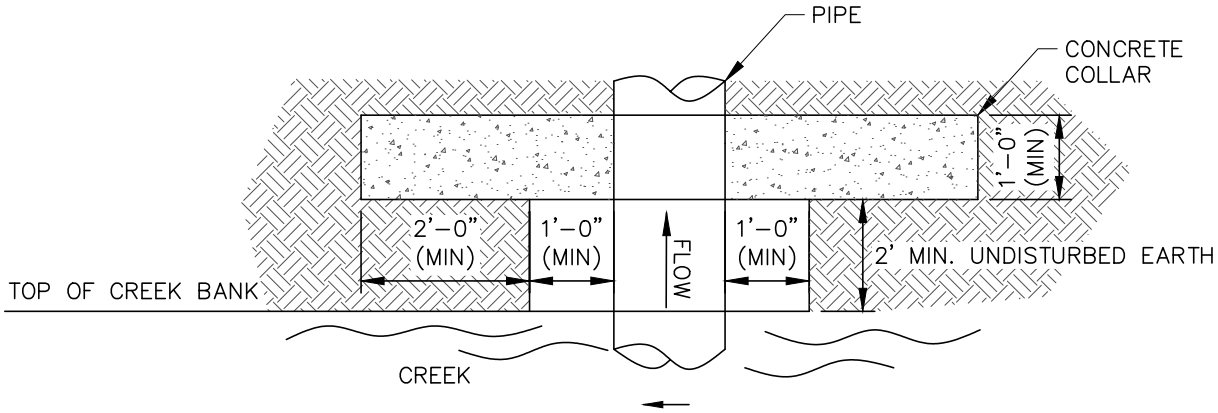

PLAN VIEW

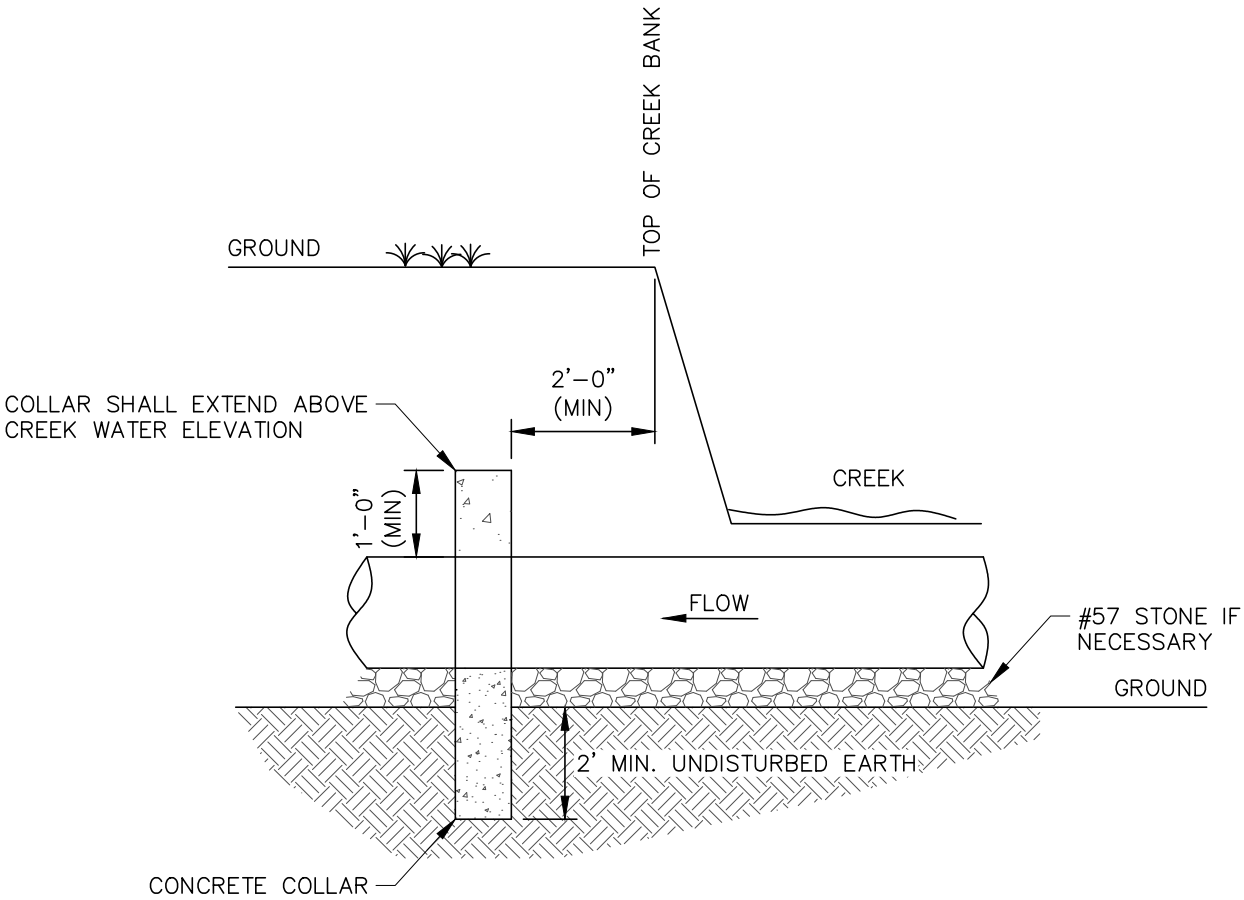

SIDE VIEW

CITY OF DAWSONVILLE	
DETAIL TITLE	DETAIL NO.
PIPE COLLAR	20.1

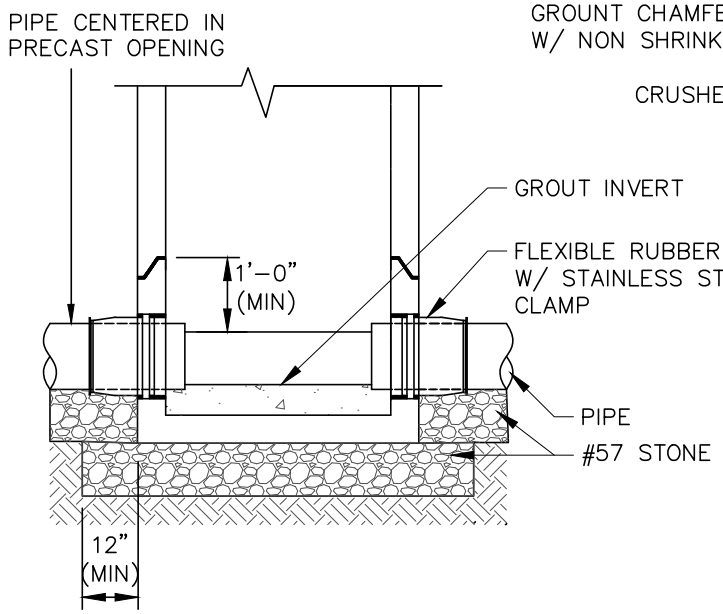

MANHOLE SECTION

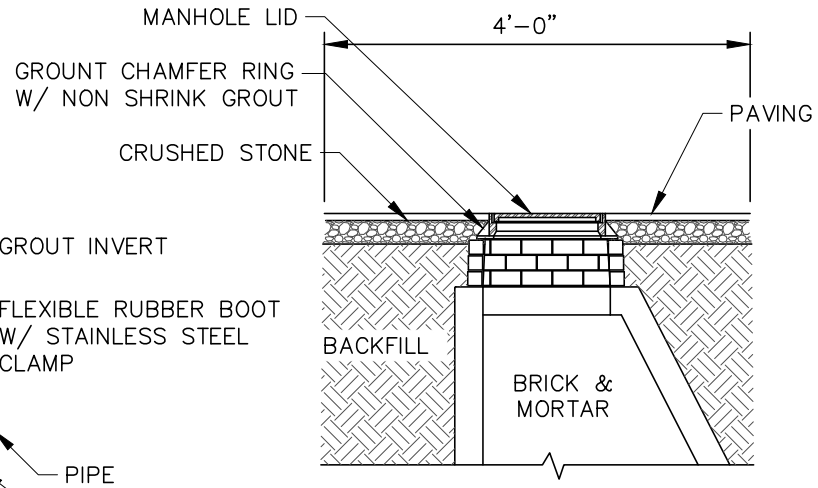

NOTE:

1. BRICKS SHALL BE STACKED NO MORE THAN FIVE COURSES.
2. BRICKS SHALL BE BEDDED AND JOINTED IN MORTAR PER CITY SPECIFICATIONS.
3. CONTRACTOR SHALL APPLY A MINIMUM 1/2" THICK MORTAR COATING (SMOOTH FINISH) TO INTERIOR FACE OF BRICK.

TYPICAL MANHOLE IN PAVEMENT DETAIL

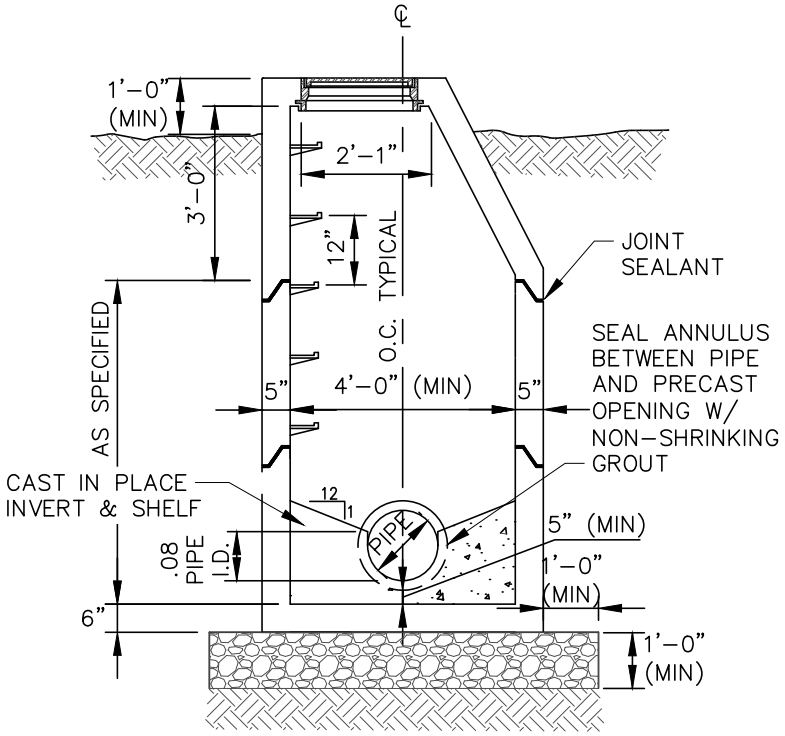

MANHOLE SECTION

NOTE:

1. PRECAST MANHOLE SECTIONS SHALL BE MANUFACTURED IN ACCORDANCE W/ ASTM C 478, AS AMMENDED TO DATE.
2. CONCRETE SHALL HAVE A MINIMUM COMPRESSIVE STRENGTH OF 4,000 PSI WHEN TESTED IN ACCORDANCE W/ ASTM C 478.
3. WHEN BRICK IS USED AS FILLER, PROVIDE MINIMUM 2" GROUT OVER BRICK.
4. LINE MANHOLE IN ACCORDANCE W/ DIVISION III, SECTION 9 OF THE SPECIFICATIONS.

CITY OF DAWSONVILLE	
DETAIL TITLE	DETAIL NO.
MANHOLE SECTIONS	21.1

SCHEDULE FOR DROP CONNECTIONS DIMENSION "X"		
PIPE SIZE	DROP SIZE	MIN. DROP
6"	6"	24"
8"	8"	24"
10"	8"	24"
12"	10"	35"
15"	12"	37"
18"	15"	39"
21"	18"	41"
24"	18"	43"
30"	18"	45"

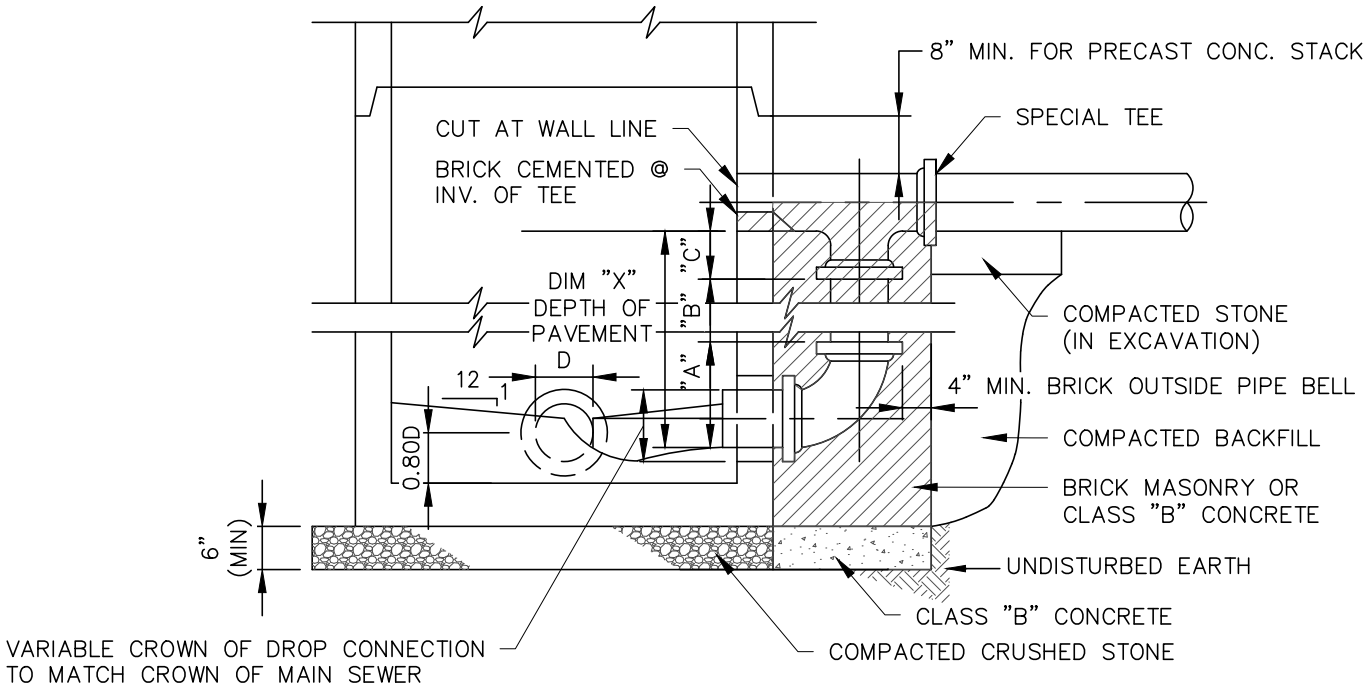

NOTE: ALL PIPING INSIDE MANHOLE SHALL BE DUCTILE IRON W/ STAINLESS STEEL HARDWARE.

CITY OF DAWSONVILLE	
DETAIL TITLE	DETAIL NO.
TYPICAL DROP MANHOLE CONNECTION DETAIL	21.2

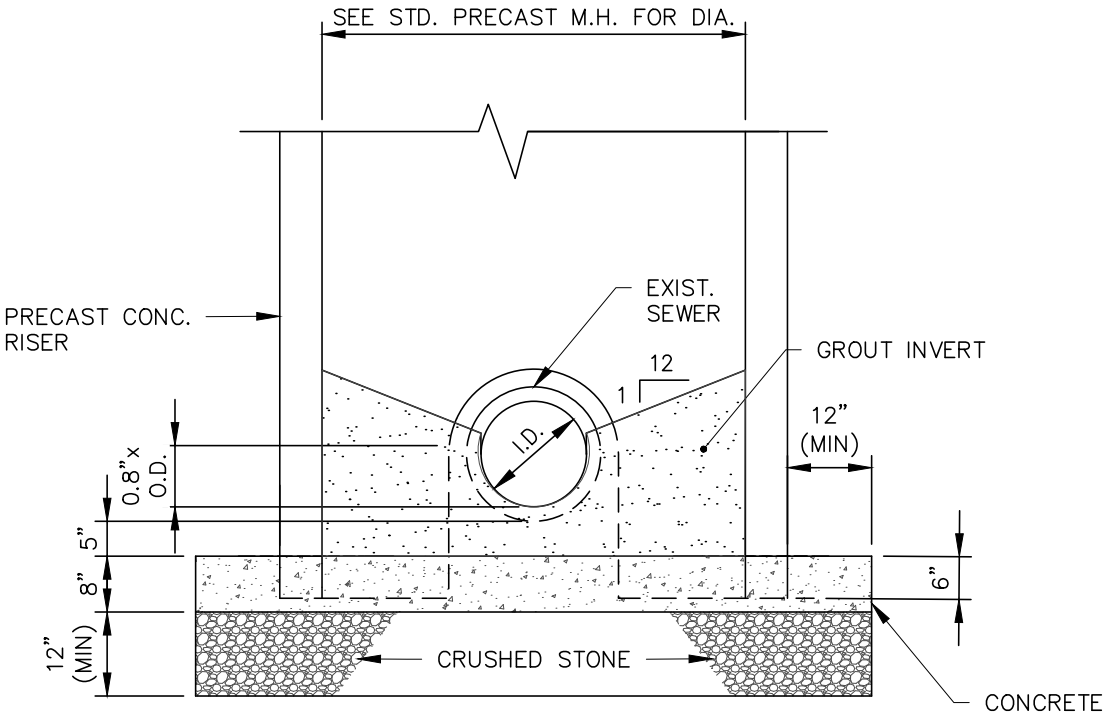

CITY OF DAWSONVILLE	
DETAIL TITLE	DETAIL NO.
TYPICAL DOG HOUSE MANHOLE DETAIL	21.3

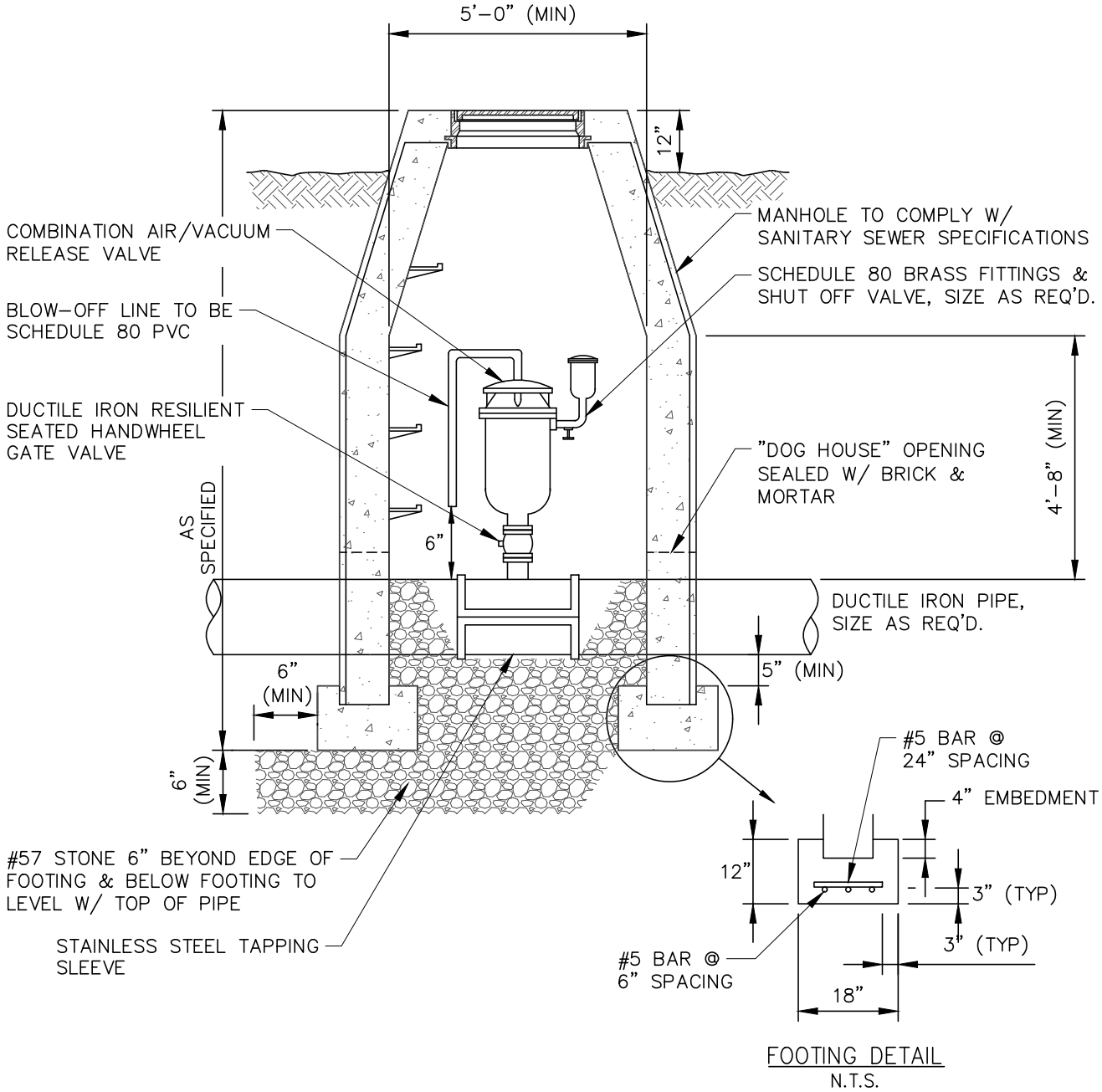

NOTE: ARV ASSEMBLY SHALL BE SET LEVEL & PLUMB.

CITY OF DAWSONVILLE	
DETAIL TITLE	DETAIL NO.
COMBINATION AIR/VACUUM RELEASE VALVE	22.1

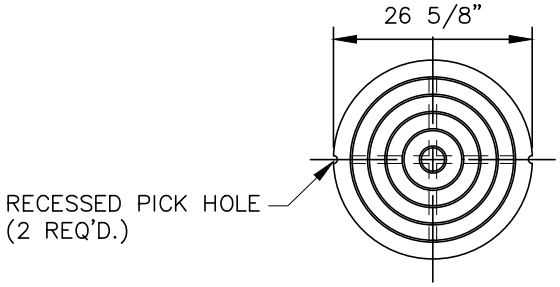

PLAN–COVER

NOTE:

SEATING SURFACE OF
FRAMES & COVERS TO
BE MACHINED TO FIT.

APPROX WT. OF FRAME 198# OR GREATER
APPROX WT. OF COVER 160# OR GREATER
APPROX TOTAL WT. 370# OR GREATER

SHALL BE:
U.S. FOUNDRY 223 BN,
NEENAH R–1423–BN,
EAST JORDAN V1349 OR EQUAL

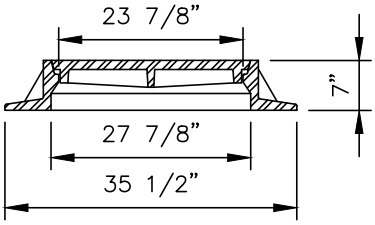

SECTION–FRAME & COVER

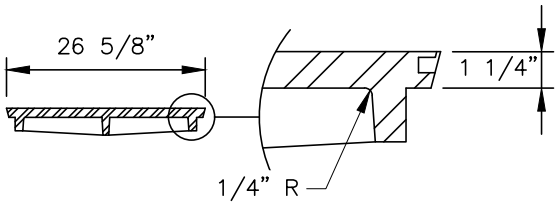

SECTION–COVER

CITY OF DAWSONVILLE	
DETAIL TITLE	DETAIL NO.
TYPICAL STANDARD C.I. D.I. MANHOLE FRAME AND COVER	22.1

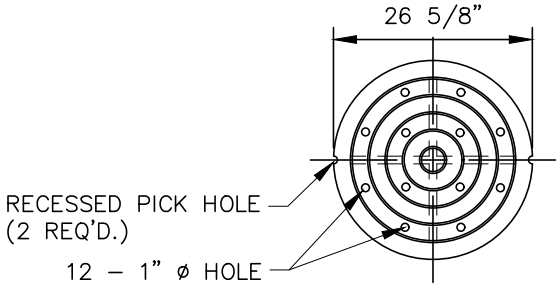

PLAN–COVER

NOTE:

SEATING SURFACE OF
FRAMES & COVERS TO
BE MACHINED TO FIT.

APPROX WT. OF FRAME 198# OR GREATER
APPROX WT. OF COVER 160# OR GREATER
APPROX TOTAL WT. 370# OR GREATER

SHALL BE:
U.S. FOUNDRY 223 BN,
NEENAH R–1423–BN,
EAST JORDAN V1349 OR EQUAL

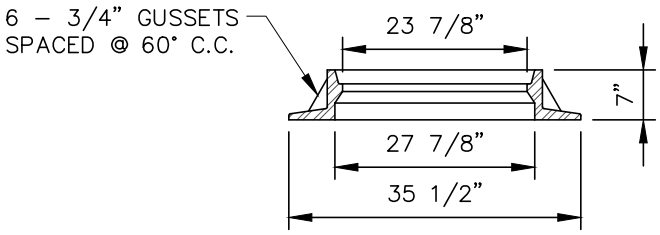

SECTION–FRAME

CITY OF DAWSONVILLE	
DETAIL TITLE	DETAIL NO.
TYPICAL VENTED C.I. D.I. MANHOLE FRAME AND COVER	22.2

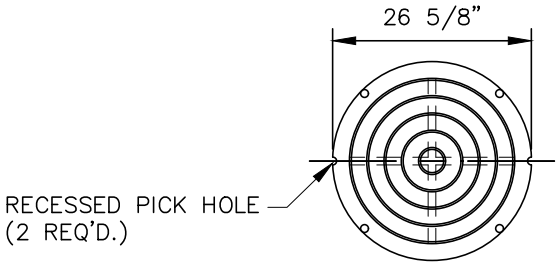

NOTE:

SEATING SURFACE OF
FRAMES & COVERS TO
BE MACHINED TO FIT.

APPROX WT. OF FRAME 198# OR GREATER
APPROX WT. OF COVER 160# OR GREATER
APPROX TOTAL WT. 370# OR GREATER

SHALL BE:
U.S. FOUNDRY 223 BN,
NEENAH R-1423-BNB,
EAST JORDAN V1349 OR EQUAL

PLAN-COVER

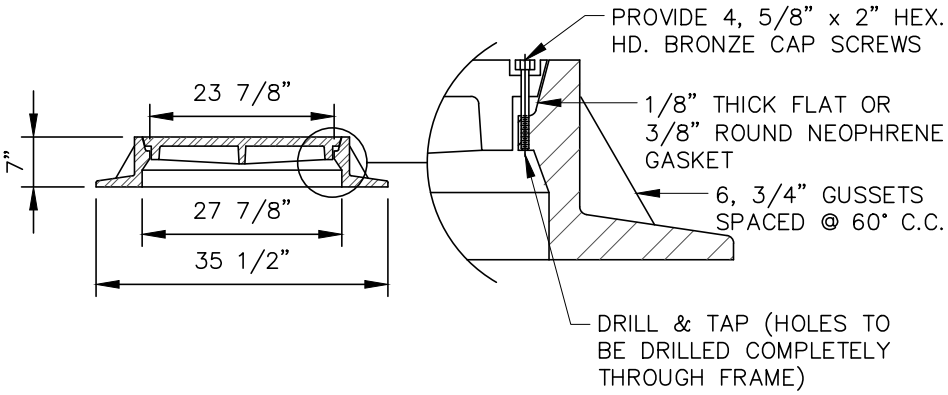

SECTION-FRAME & COVER

CITY OF DAWSONVILLE	
DETAIL TITLE	DETAIL NO.
TYPICAL WATERTIGHT C.I. D.I. MANHOLE FRAME AND COVER	22.3

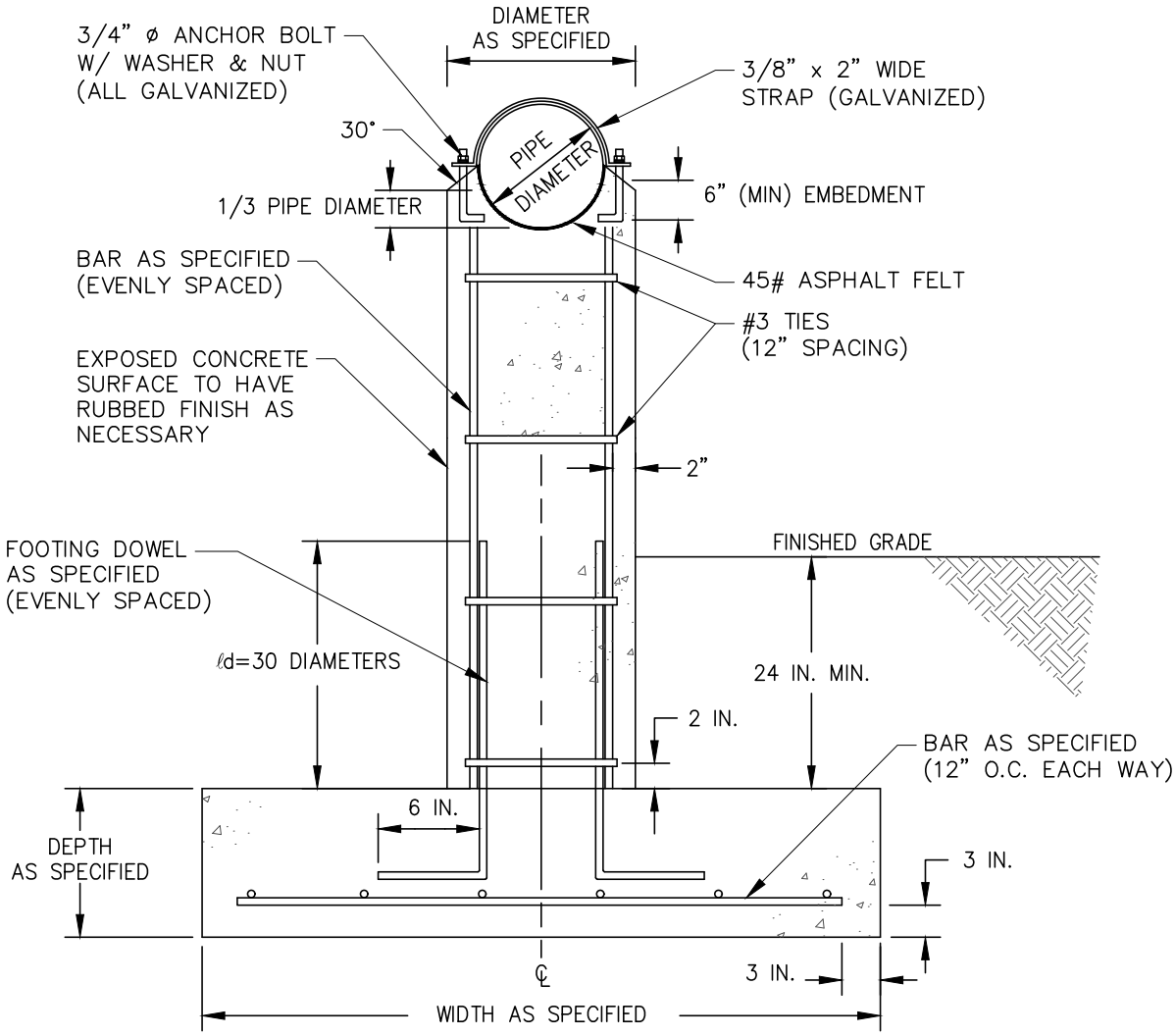

CONCRETE PIERS

PIPE SIZE (INCHES)	PIER DIAMETER (INCHES)	PIER REINFORCING STEEL (EVENLY SPACED)
8	16	6 : # 5 BAR, # 3 TIE AT 12" O.C.
10	18	6 : # 5 BAR, # 3 TIE AT 12" O.C.
12	20	6 : # 5 BAR, # 3 TIE AT 12" O.C.
14	22	6 : # 6 BAR, # 3 TIE AT 12" O.C.
16	24	6 : # 6 BAR, # 3 TIE AT 12" O.C.

CONCRETE FOOTINGS

PIER DIAMETER (INCHES)	FOOTING WIDTH AND DEPTH (INCHES)	FOOTING REINFORCING STEEL (EVENLY SPACED, 12 INCH MAX. SPACING EACH WAY)	FOOTING DOWELS (EVENLY SPACED)
16	40 X 40 X 12 DEPTH	# 5 BAR	# 5 BAR
18	42 X 42 X 15 DEPTH	# 5 BAR	# 5 BAR
20	44 X 44 X 15 DEPTH	# 5 BAR	# 5 BAR
22	46 X 46 X 18 DEPTH	# 6 BAR	# 6 BAR
24	48 X 48 X 20 DEPTH	# 6 BAR	# 6 BAR

CITY OF DAWSONVILLE	
DETAIL TITLE	DETAIL NO.
PIER DIMENSIONS AND SECTION	23.1

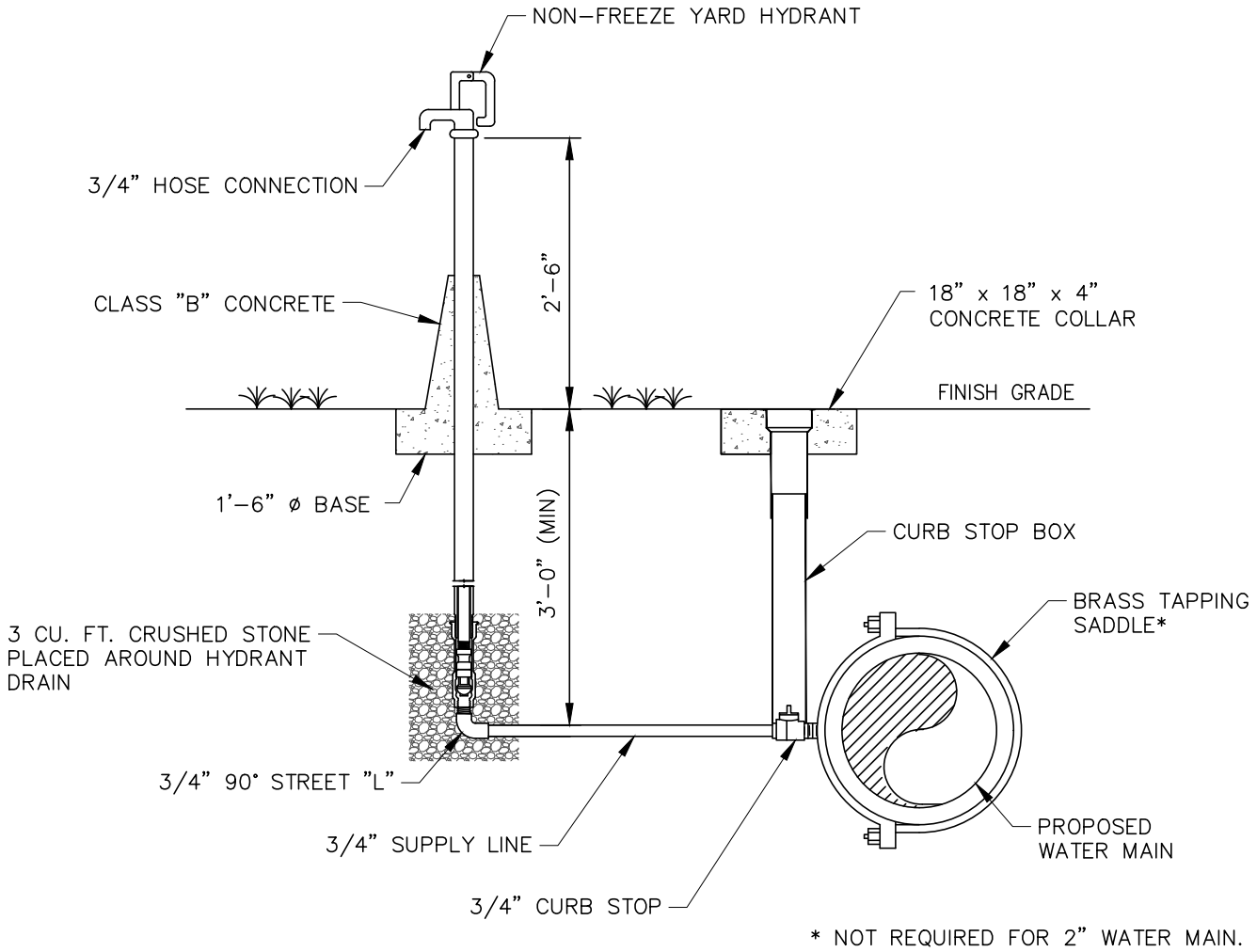

NOTE: THE DISTANCE FROM THE WATER MAIN TO THE YARD HYDRANT SHALL BE DETERMINED IN FIELD BY ENGINEER.

CITY OF DAWSONVILLE	
DETAIL TITLE	DETAIL NO.
YARD HYDRANT	26.1

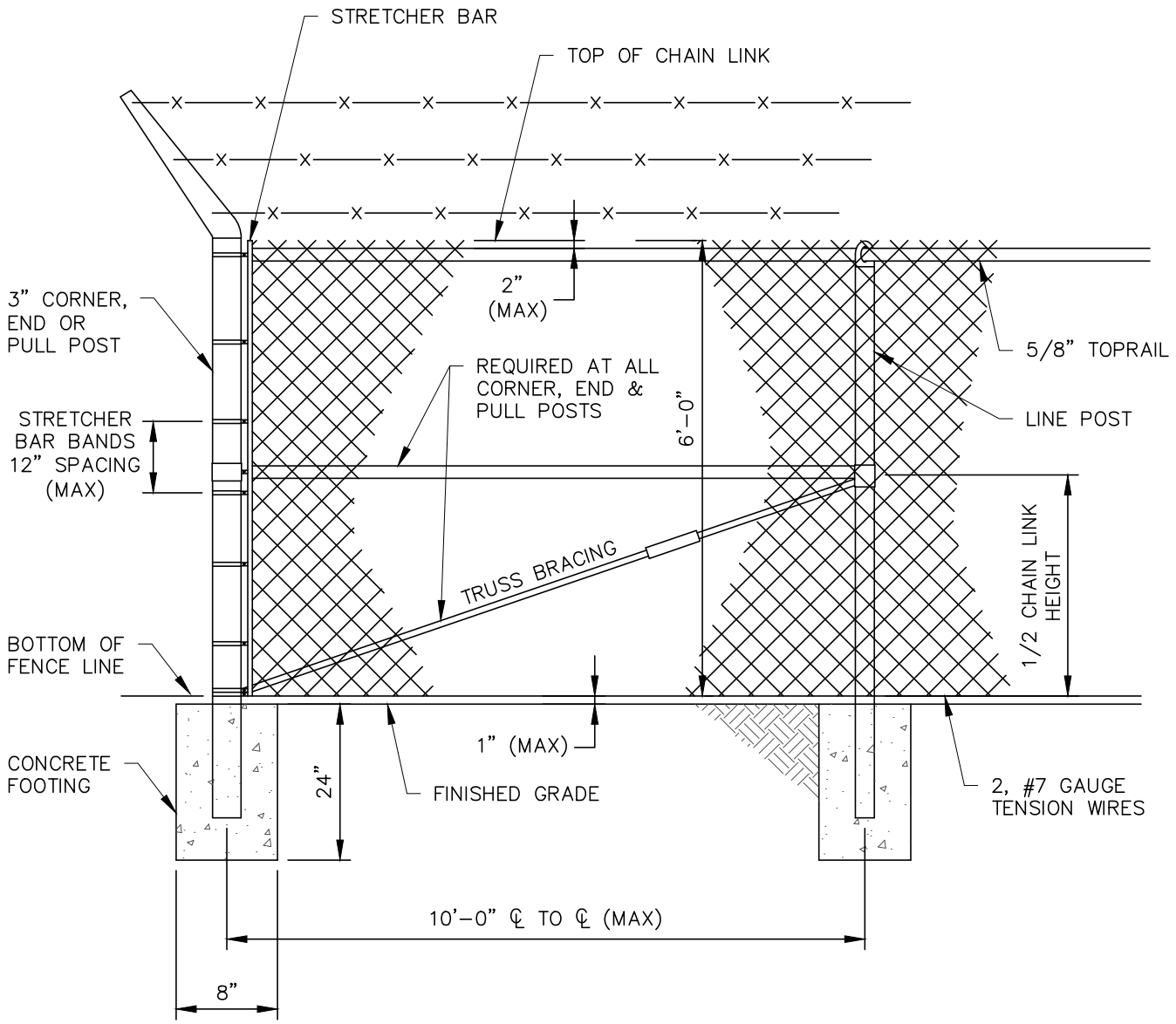

NOTE: PROVIDE PVC COATED CHAIN LINK FOR FENCE.

CITY OF DAWSONVILLE	
DETAIL TITLE	DETAIL NO.
CHAIN LINK FENCE	27.1

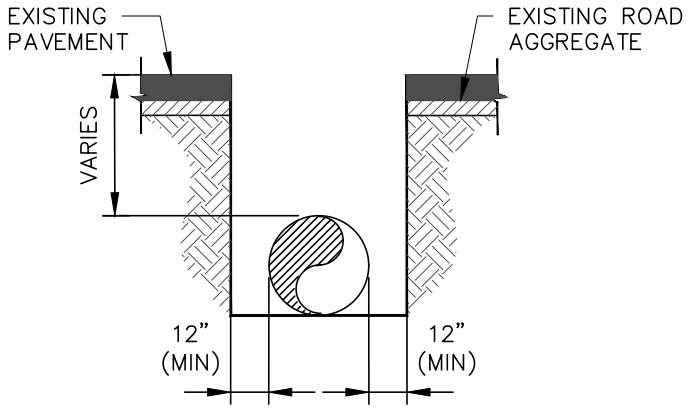

PAVEMENT TO BE SAW CUT TO NEAT LINES AND REMOVED

STAGE 1

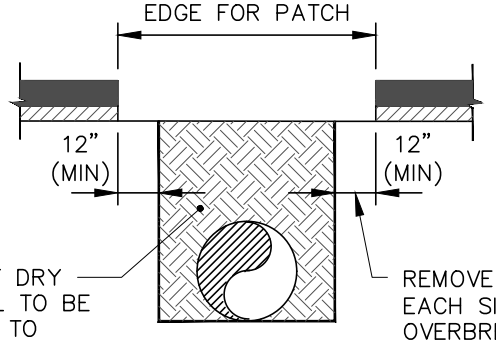

FILL COMPACTED TO 95% OF DRY MAXIMUM DENSITY. MATERIAL TO BE COMPACTED IN LAYERS NOT TO EXCEED 6".

REMOVE EXTRA 12" OF PAVEMENT ON EACH SIDE OF TRENCH OR TO VISIBLE OVERBREAK WHICHEVER IS GREATER

STAGE 2

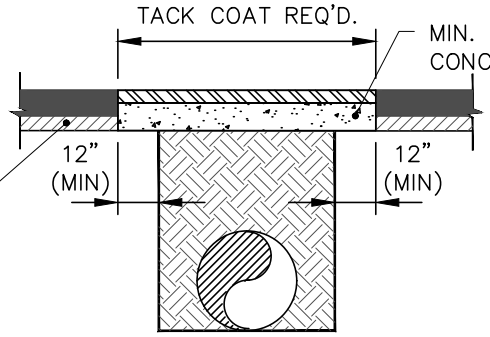

EXISTING ROAD AGGREGATE COMPACTED TO 100% OF DRY MAXIMUM DENSITY

SURFACES TO BE CLEANED AND BITUMINOUS TACK COAT APPLIED BEFORE PLACEMENT OF TYPE "E" OR "F" ASPHALTIC.

STAGE 3

CITY OF DAWSONVILLE	
DETAIL TITLE	DETAIL NO.
TYPICAL ASPHALT REPLACEMENT	28.1

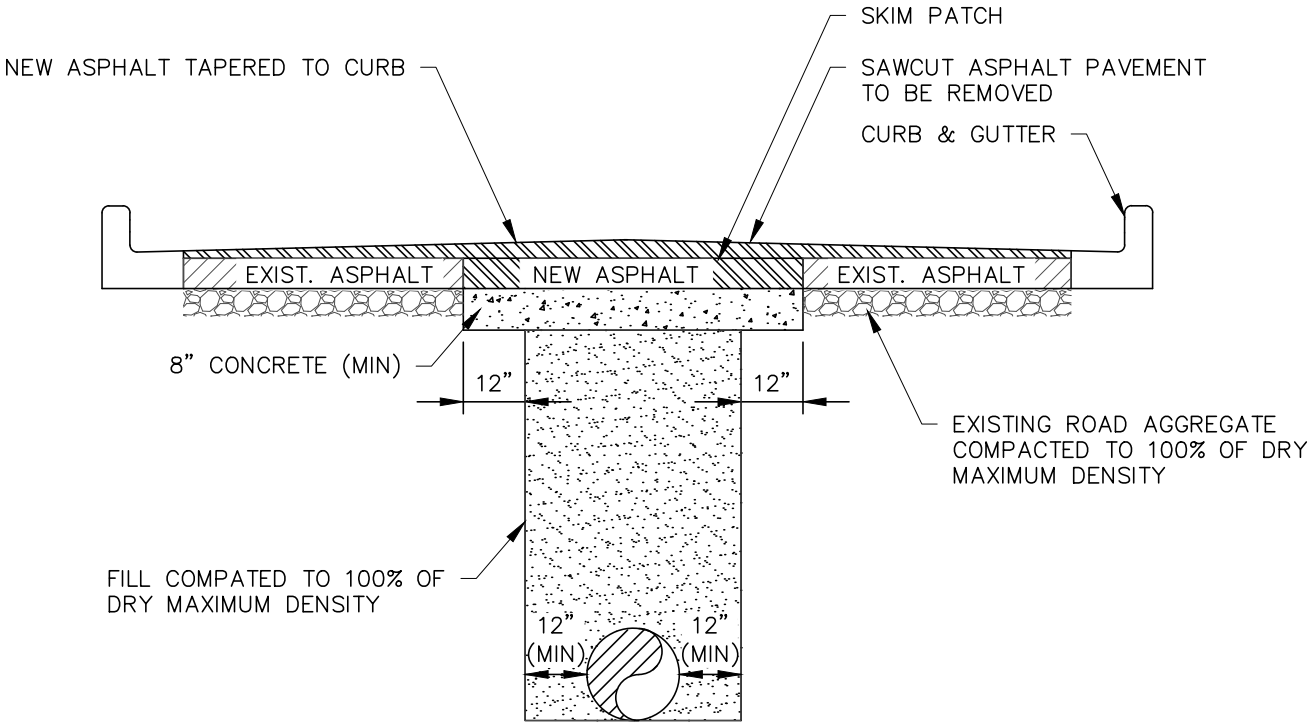

NOTE: TAPER NEW ASPHALT PAVEMENT TO EXISTING PAVEMENT.

CITY OF DAWSONVILLE	
DETAIL TITLE	DETAIL NO.
TYPICAL ASPHALT TO CURB REPLACEMENT	29.1

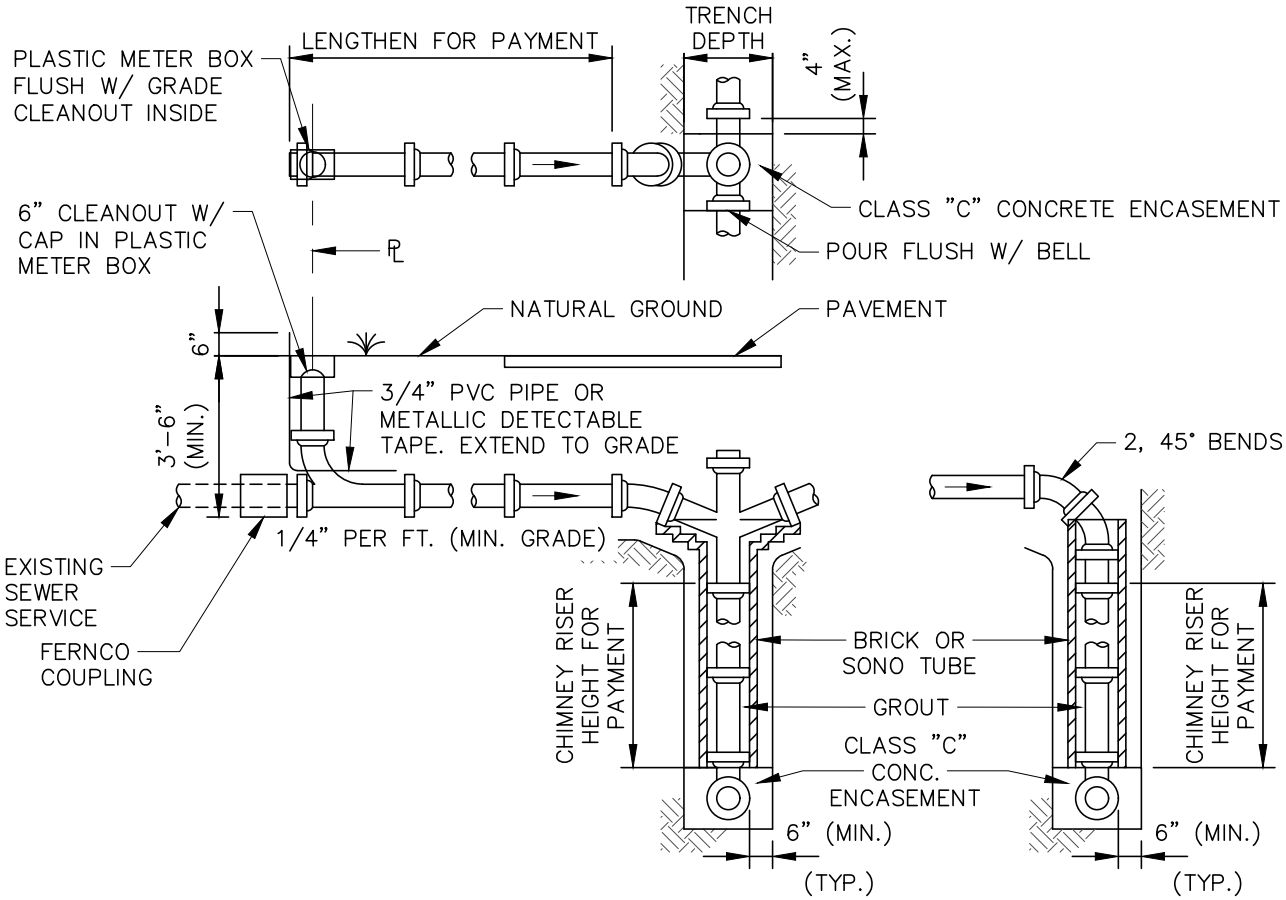

TYP. FOR DEEP CUTS

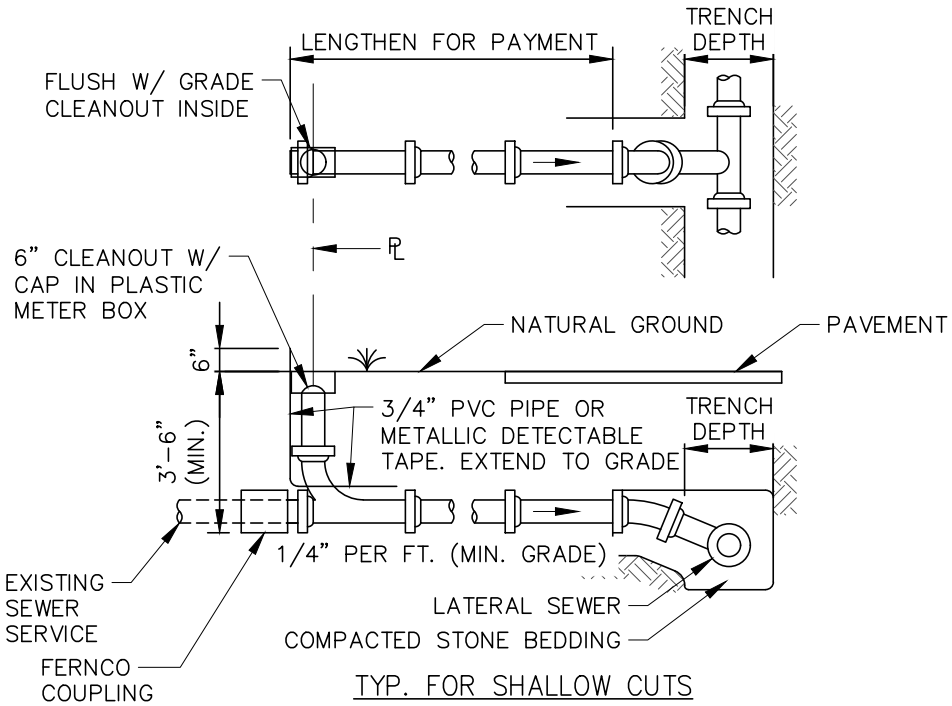

TYP. FOR SHALLOW CUTS

CITY OF DAWSONVILLE	
DETAIL TITLE	DETAIL NO.
TYPICAL CLEANOUT ASSEMBLY	32.1

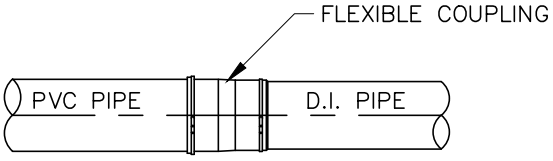

NOTE:

1. CONTRACTOR TO USE COUPLING AS RECOMMENDED BY MFG. IN JOINTING UNLIKE TYPES OF PIPE.
2. CONTRACTOR TO USE FLEXIBLE COUPLING IN LIEU OF CONCRETE COLLAR, PIPE SIZES 4" THRU 24".

FLEXIBLE COUPLING

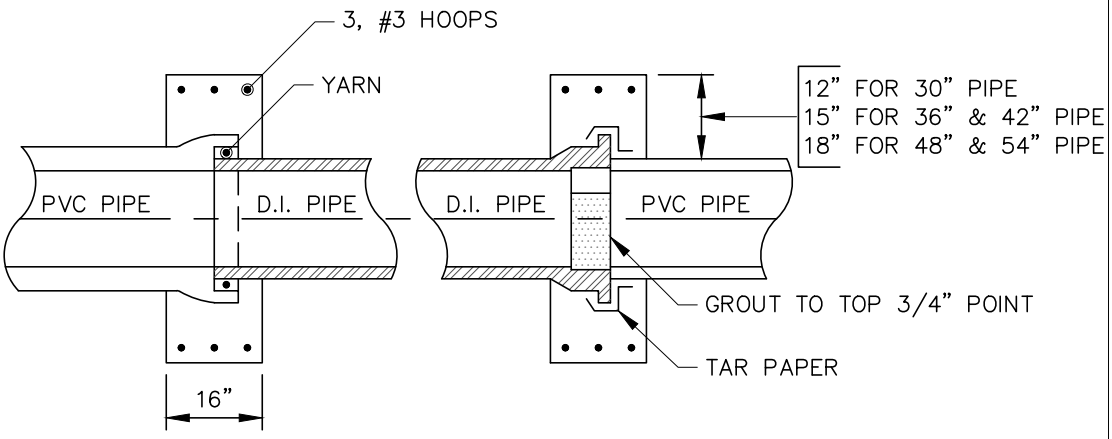

NOTE:

COLLAR TO BE CLASS "B" CONCRETE.

CONCRETE COLLAR

CITY OF DAWSONVILLE	
DETAIL TITLE	DETAIL NO.
D.I. PIPE AND PVC PIPE CONNECTION DETAIL	33.1

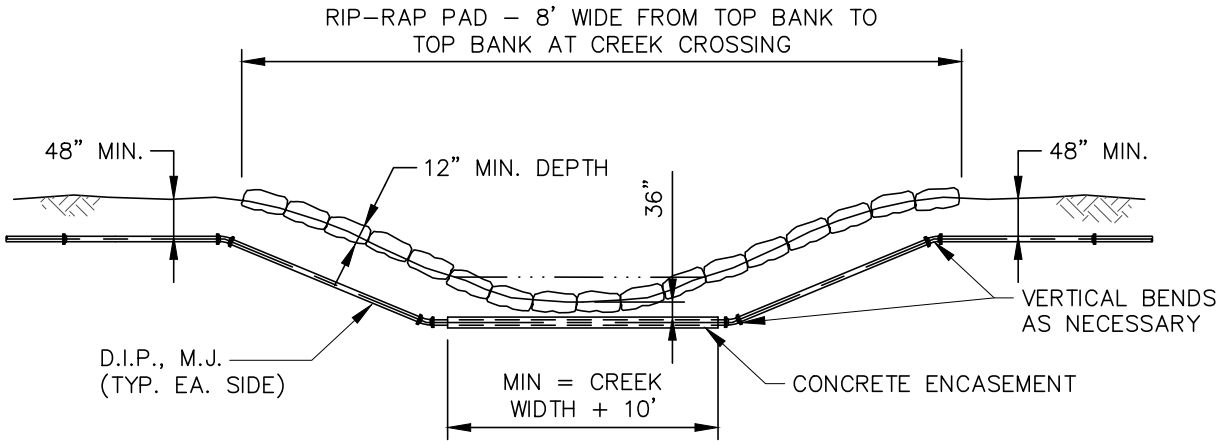

NOTE:

1. ALL JOINTS IN D.I.P.. M.J. USED IN CREEK CROSSINGS SHALL BE RESTRAINED WITH M.J. RETAINER GLANDS–EBSS IRON OR EQUAL.
2. PROVIDE CONCRETE ENCASEMENT WHERE INDICATED ON THE DRAWIINGS OR AS DIRECTED BY THE ENGINEER.

CITY OF DAWSONVILLE	
DETAIL TITLE	DETAIL NO.
CREEK CROSSING DETAIL	36.1

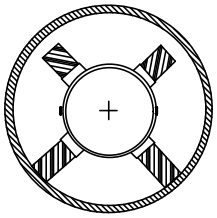

STANDARD
POSITIONING FOR
SANITARY SEWER

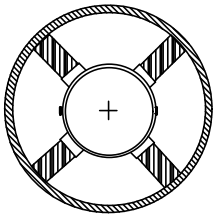

CENTERED/RESTRAINED
POSITIONING FOR WATER MAINS
MECHANICAL JOINT PIPE
REQUIRED FOR WATER MAINS

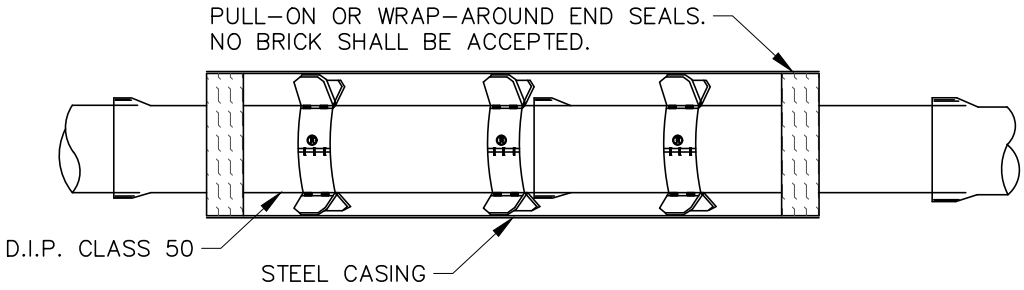

NOTE:

1. SPACER OPTIONS: 8" WIDE BAND OR 12".
2. APPROVED TYPES ARE CASCADE OR PSI.
3. INSTALLATION SHALL BE IN ACCORDANCE WITH THE MANUFACTURERS STANDARDS.
4. WOODEN SKIDS SHALL NOT BE ACCEPTABLE.

D.I. PUSH-ON JOINT CARRIER PIPE SIZE	CASING PIPE			
	ROADWAY		RAILROAD	
	SIZE	THICKNESS*	SIZE	THICKNESS*
4"	10"	.250"	12"	.250"
6"	12"	.250"	16"	.312"
8"	14"	.250"	18"	.312"
10"	16"	.312"	20"	.312"
12"	18"	.312"	24"	.312"
14"	20"	.312"	20"	.375"
16"	24"	.375"	24"	.375"
18"	26"	.375"	26"	.375"
20"	28"	.375"	28"	.375"
24"	32"	.375"	32"	.375"

* .063" HAS BEEN ADDED TO MIN. FOR CORROSION ALLOWANCE

NOTE:

STEEL PIPE CASING SHALL BE MANUFACTURED FROM STEEL CONFORMING TO ASTM A252 GRADE 2 AS AMENDED TO DATE, WITH A MINIMUM YIELD STRENGTH OF 35,000 PSI BEFORE COLD FORMING. PIPE MAY BE STRAIGHT SEAM OR SPIRAL WELD.

CITY OF DAWSONVILLE	
DETAIL TITLE	DETAIL NO.
TYPICAL ENCASED CROSSING DETAIL	37.1