# ***STANDARD DETAILS***

## ***CITY OF DAWSONVILLE, GEORGIA***

# ***STANDARD DETAILS***

**CITY OF DAWSONVILLE, GEORGIA**
**415 Highway 53 East**
**Dawsonville, Georgia 30534**
**Office: (706) 265- 3256/ Fax: (706) 265- 4214**

***Prepared by:***

TURNIPSEED ENGINEERS

**Adopted: _____**

**TABLE OF CONTENTS**

1.1 Underground Utilities Locations
2.1 Typical Ductile Iron Water Pipe Bedding
3.1 Pipe Depth at Edge of Pavement
4.1 Typical Fire Hydrant Detail
5.1 Fire Hydrant in Cul-de-Sac
6.1 Valve Box Detail
6.2 Valve Marker Post
6.3 Valve Anchor
7.1 Thrust Block Dimensions
7.2 Connect to Existing Water Line
8.1 Typical Concrete Anchor
9.1 Thrust Restraint at Fitting
10.1 Long Side Service
11.1 Short Side Service
12.1 2” Meter
12.2 2” RPZ Back Flow Preventer Detail
13.1 3” Domestic Meter and Larger
14.1 Fire Meter
15.1 Fire Meter Vault
16.1 FDC Vault
17.1 Raw Sewage Pump Station Emergency By-Pass Connection
18.1 Typical PVC Sewer Pipe Bedding
18.2 Typical Ductile Iron Sewer Pipe Bedding
19.1 Sewer Lateral Connection
20.1 Pipe Collar
21.1 Manhole Sections
21.2 Typical Drop Manhole Connection Detail
21.3 Typical Dog House Manhole Detail
22.1 Combination Air/Vacuum Release Valve
23.1 Typical Standard C.I. D.I. Manhole Frame and Cover
23.2 Typical Vented C.I. D.I. Manhole Frame and Cover
23.3 Typical Watertight C.I. D.I. Manhole Frame and Cover
24.1 Pier Dimensions and Section
25.1 Force Main Connection to Manhole
25.2 Force Main Connection to Manhole (Drop Bowl)
26.1 Yard Hydrant
27.1 Chain Link Fence
28.1 Typical Asphalt Replacement
29.1 Typical Asphalt to Curb Replacement
30.1 Typical Cleanout Assembly
31.1 D.I. Pipe and PVC Pipe Connection Detail
32.1 Water Line Creek Crossing Detail
32.2 Sewer Line Creek Crossing Detail
33.1 Typical Encased Crossing Detail
34.1 Typical Section Subdivision Road
35.1 Typical Sidewalk Detail

36.1 Typical Curb & Gutter Detail
36.2 Roll Back Curb & Gutter Detail
37.1 Ornamental Steel Handrail Detail

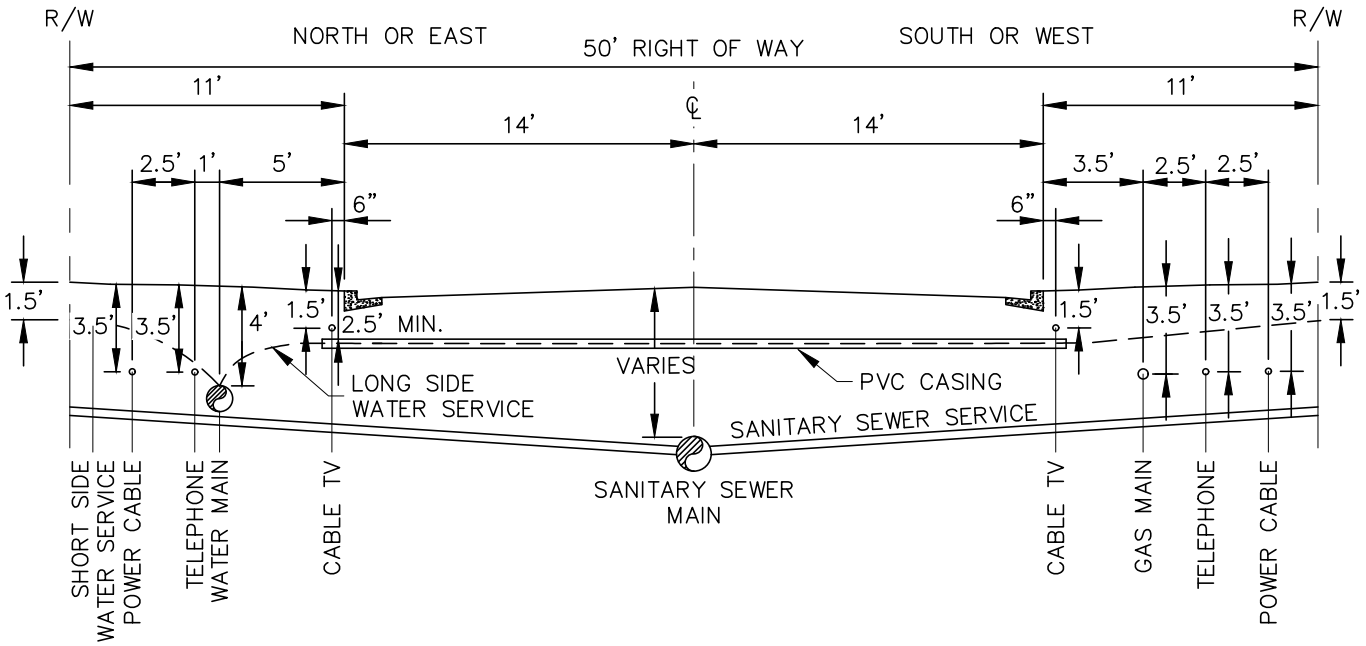


NOTE:

1. ON ALL UNCURBED STREET, UTILITY LOCATIONS SHALL BE AT THE SAME DISTANCES FROM ℄ AS SHOWN.
2. WATER MAIN, SANITARY SEWER MAIN, AND LONGSIDE WATER SERVICE SHALL BE LOCATED AS SHOWN. ALL OTHER UTILITIES WILL BE COORDINATED WITH THE APPLICABLE UTILITY.
3. NO TREES OR FENCES ALLOWED WITHIN THE ROAD R/W OR UTILITY EASEMENT EXCEPT WHERE REQUIRED BY CITY, COUNTY, OR OTHER GOVERNMENT ORDINANCE.
4. ALL TREES SHALL BE CLEARED AND SHOULDERS GRADED WITHIN 6" OF FINAL GRADE (INCLUDING UTILITY EASEMENT) PRIOR TO THE INSTALLATION OF ANY UTILITIES.
5. PROPERTY CORNER REFERENCE SHALL BE PLACED ON CURB AND GUTTER AND ON 10' OFFSET STAKE.
6. WATER LATERALS SHALL BE MARKED WITH A BLUE "W" ON CURB AS SOON AS POSSIBLE AFTER CURB HAS BEEN INSTALLED. SEWER LATERALS SHALL BE MARKED WITH A GREEN "X" ON CURB.
7. DEPTH REQUIREMENTS INDICATE MINIMUM DEPTH AT TIME OF INSTALLATION BELOW CURB LINE.

| CITY OF DAWSONVILLE | |
|---|---|
| DETAIL TITLE | DETAIL NO. |
| UNDERGROUND UTILITIES LOCATIONS | 1.1 |

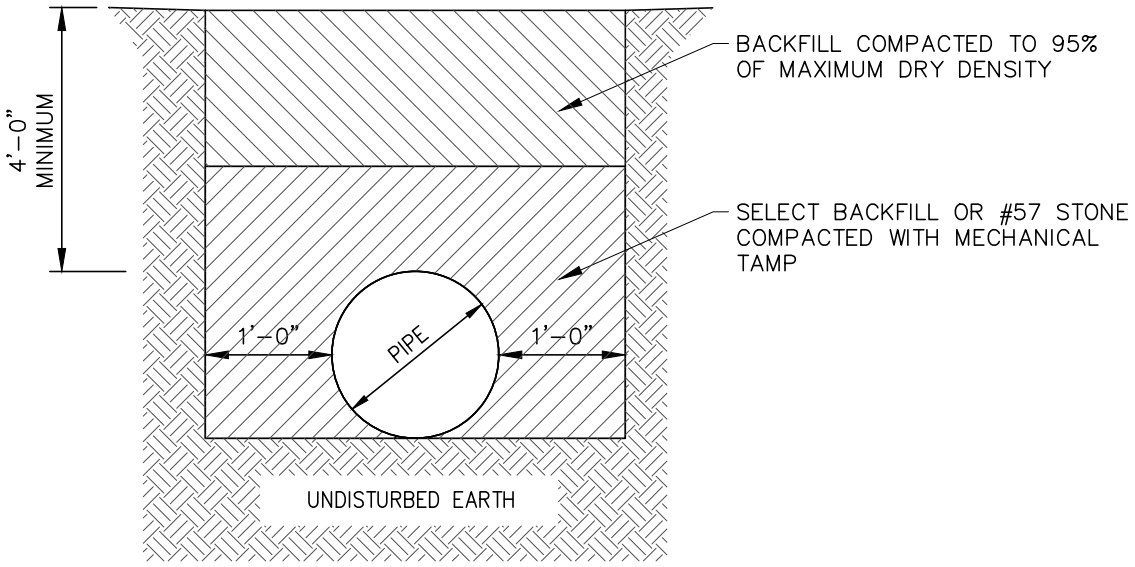


NOTE:

1. UNSUITABLE SOILS ENCOUNTED IN BOTTOM OF EXCAVATED TRENCH SHALL BE EXCAVATED & REPLACED WITH #57 STONE.
2. ONLY SUITABLE SOIL SHALL BE USED AS BACKFILL.

| CITY OF DAWSONVILLE | |
|---|---|
| DETAIL TITLE | DETAIL NO. |
| TYPICAL DUCTILE IRON WATER PIPE BEDDING | 2.1 |

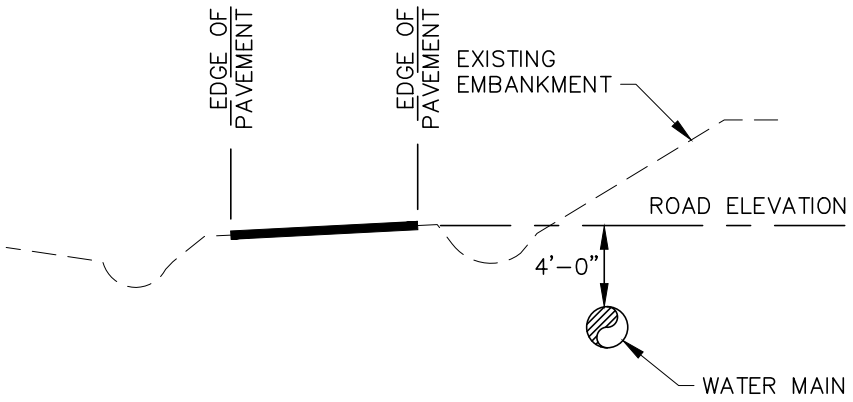


NOTE: UNLESS OTHERWISE INDICATED ON PLANS MINIMUM SOIL COVER ABOVE PIPE IS 4 FEET.

WHERE GROUND ELEVATION IS ABOVE ROAD ELEVATION

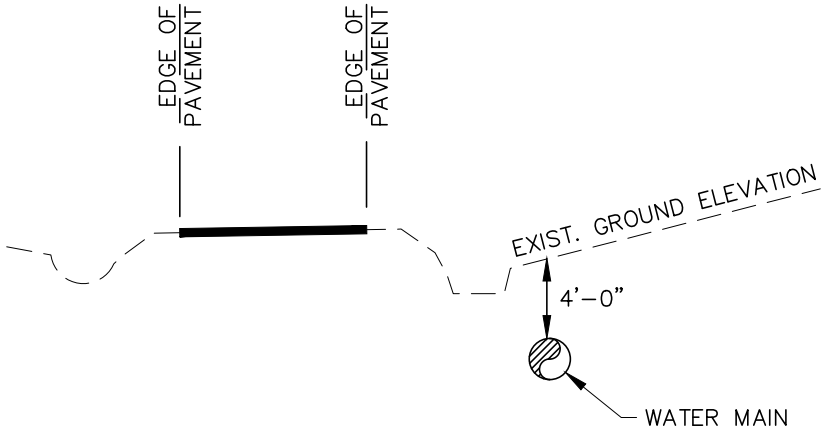


NOTE: UNLESS OTHERWISE INDICATED ON PLANS MINIMUM SOIL COVER ABOVE PIPE IS 4 FEET.

WHERE GROUND ELEVATION IS BELOW ROAD ELEVATION

| CITY OF DAWSONVILLE | |
|---|---|
| DETAIL TITLE | DETAIL NO. |
| PIPE DEPTH AT EDGE OF PAVEMENT | 3.1 |

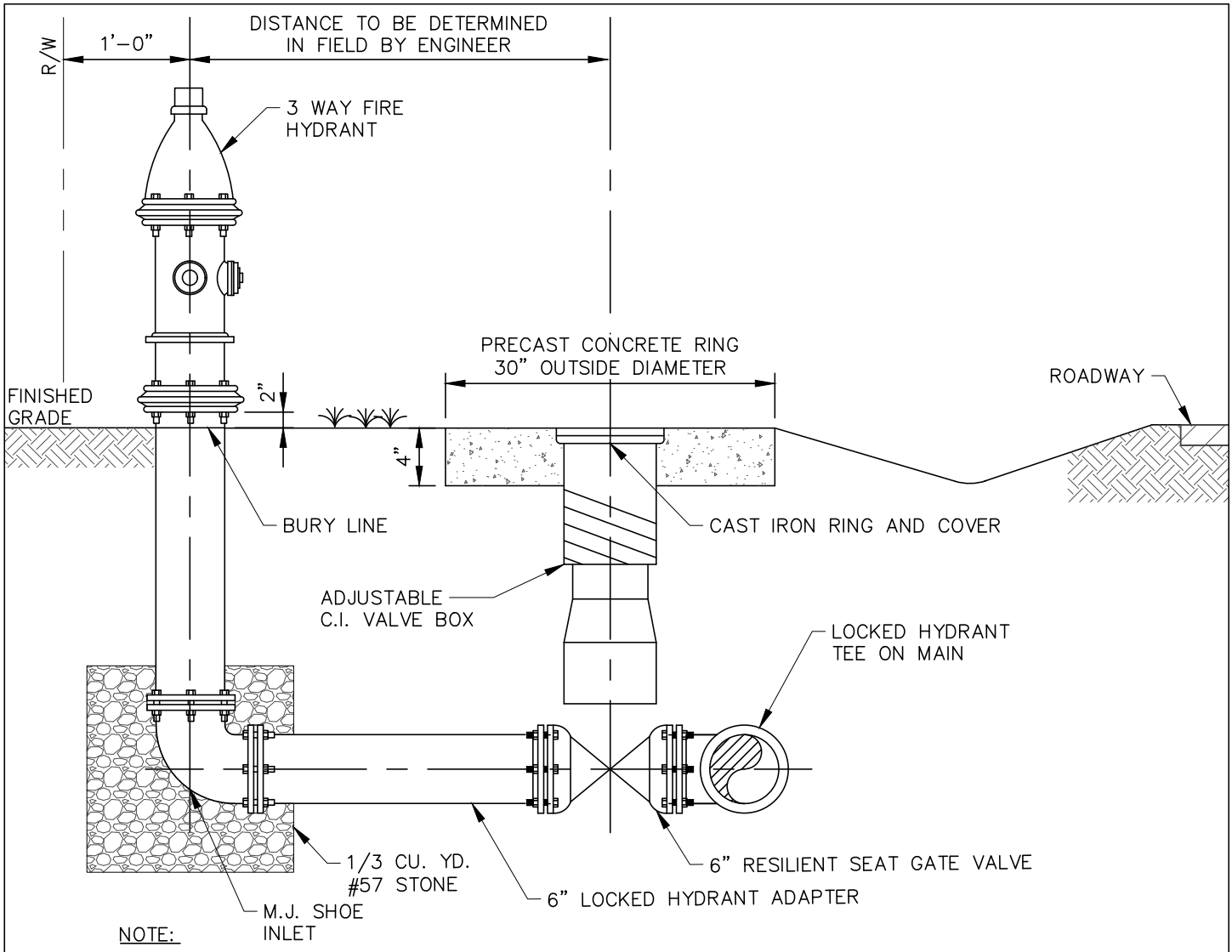


NOTE:

1. HYDRANT NOZZLE TO FACE STREET.
2. HYDRANT AND VALVE BOX SHALL BE SET PLUMB AND ADJUSTED TO GRADE.
3. ALL MATERIAL AND CONSTRUCTION SHALL BE I.A.W. THE SPECIFICATIONS.
4. FIRE HYDRANTS, VALVES & VALVE BOXES SHALL NOT BE LOCATED IN DITCH LINE.
5. ALL FIRE HYDRANT VALVES ARE TO HAVE 5 1/4" OPENINGS.
6. CONCRETE COLLAR REQ'D. WHERE VALVE BOX IS NOT LOCATED IN PAVED AREA.
7. GRAVEL TO BE PLACED AROUND HYDRANT DRAIN, MINIMUM DIMENSIONS 2' x 2' x 2.25'.
8. OFFSET ANCHOR ALLOWED TO ADJUST F.H. TO GRADE.
9. INSTALL 2" +/- ABOVE /BELOW GRADE.
10. WHERE LOCKED HYDRANT TEES OR LOCKED HYDRANT ADAPTORS CANNOT BE USED, D.I. PIPE SHALL BE RESTRAINED WITH MEGALUGS AND THREADED RODS.

| CITY OF DAWSONVILLE | |
|---|---|
| DETAIL TITLE | DETAIL NO. |
| TYPICAL FIRE HYDRANT DETAIL | 4.1 |

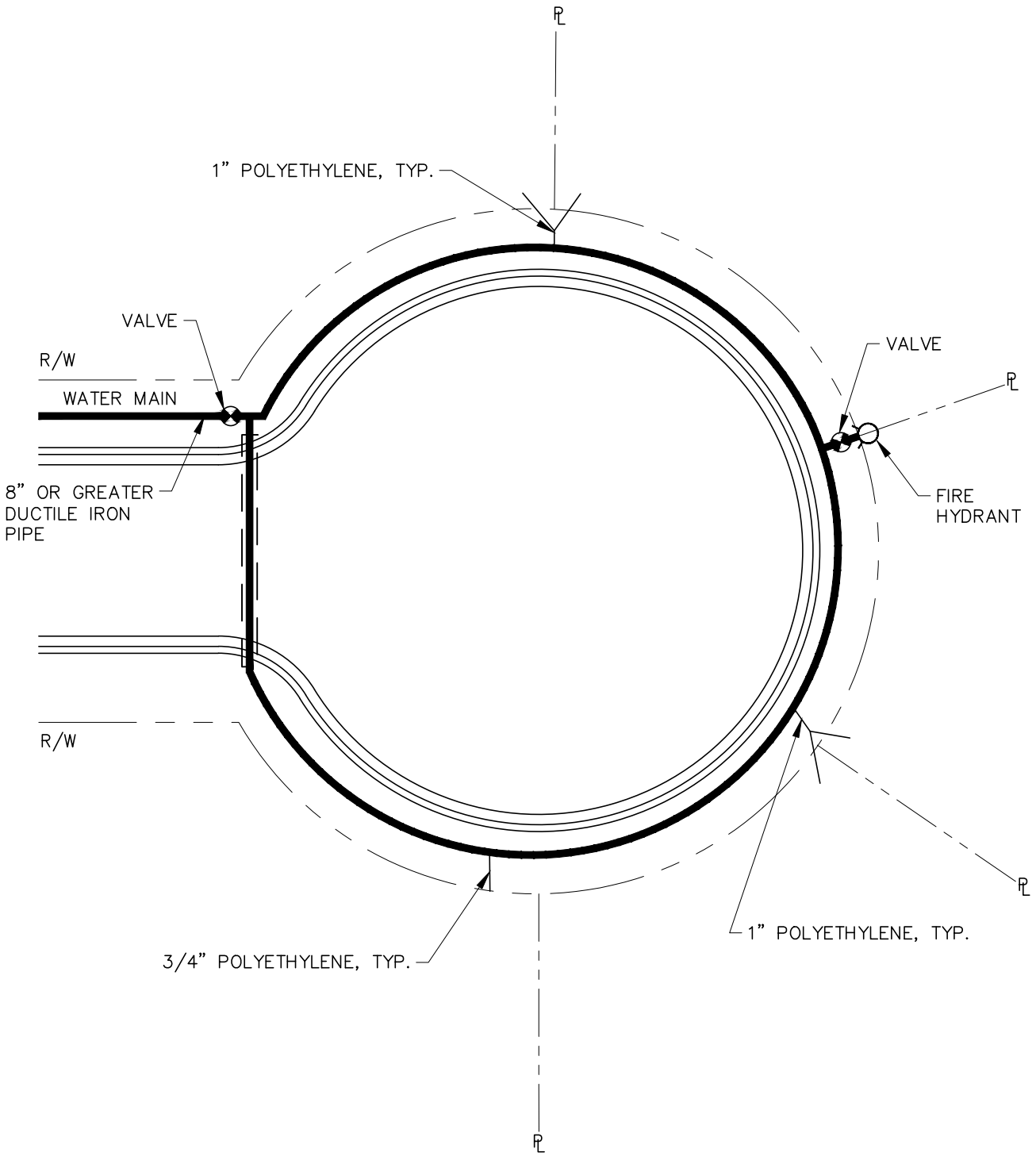


| CITY OF DAWSONVILLE | |
|---|---|
| DETAIL TITLE | DETAIL NO. |
| FIRE HYDRANT IN CUL-DE-SAC | 5.1 |

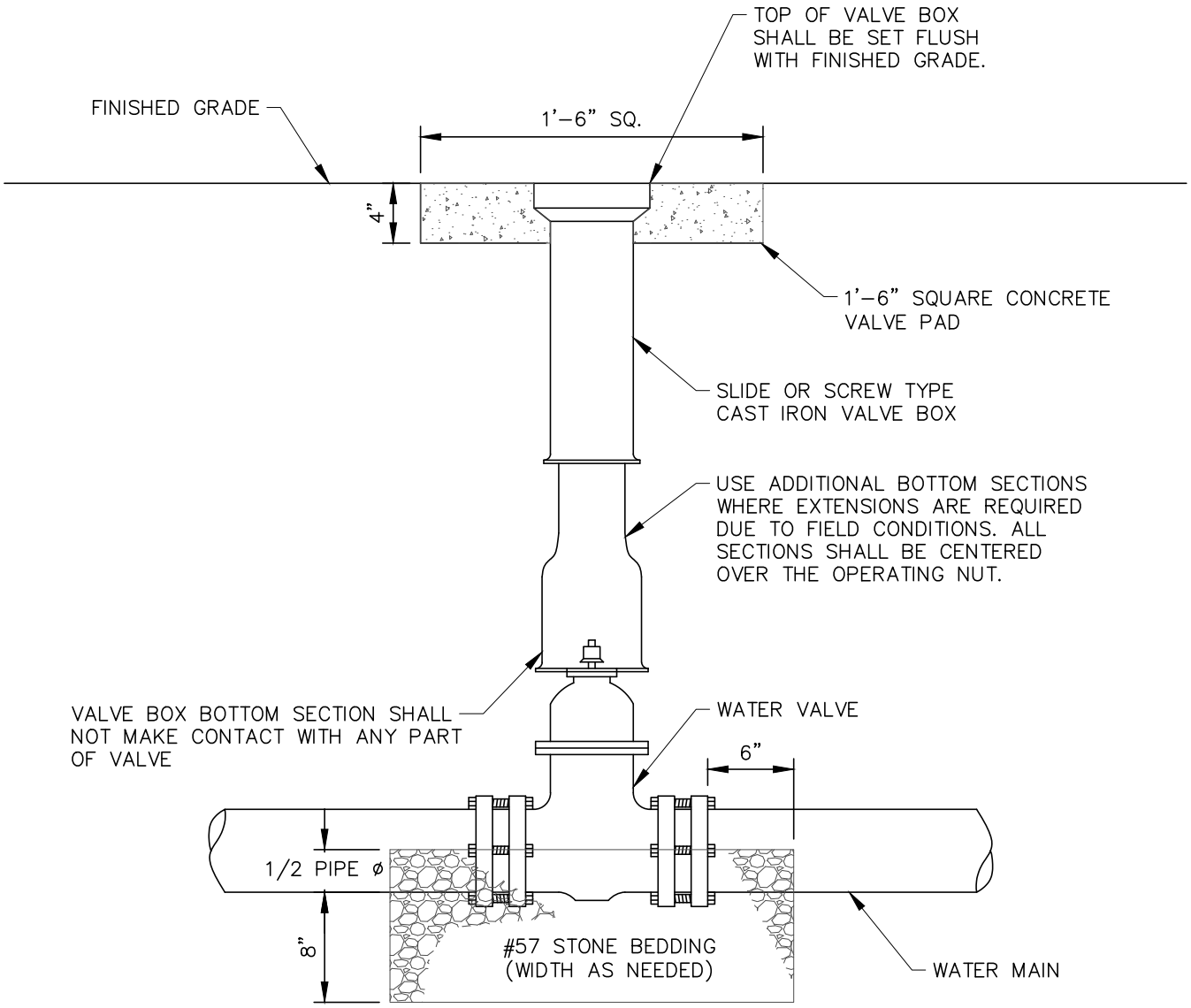


NOTE: VALVE BOX SHALL NOT BE SET IN DEPRESSED AREA.

| CITY OF DAWSONVILLE | |
|---|---|
| DETAIL TITLE | DETAIL NO. |
| VALVE BOX DETAIL | 6.1 |

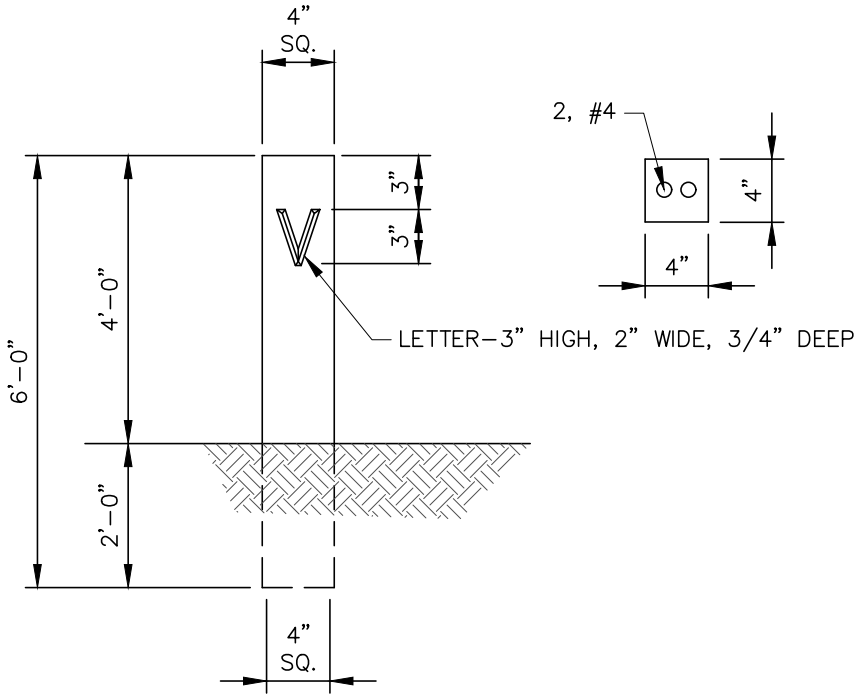


NOTE:

1. #5 x 2'-9" REBAR TO BE CAST IN CENTER.
2. COBCRETE SHALL BE MIN. 3,000 PSI W/ MAX. AGGREGATE SIZE OF 1/2".
3. VALVE MARKERS TO BE LOCATED BY THE ENGINEER.

| CITY OF DAWSONVILLE | |
|---|---|
| DETAIL TITLE | DETAIL NO. |
| VALVE MARKER POST | 6.2 |

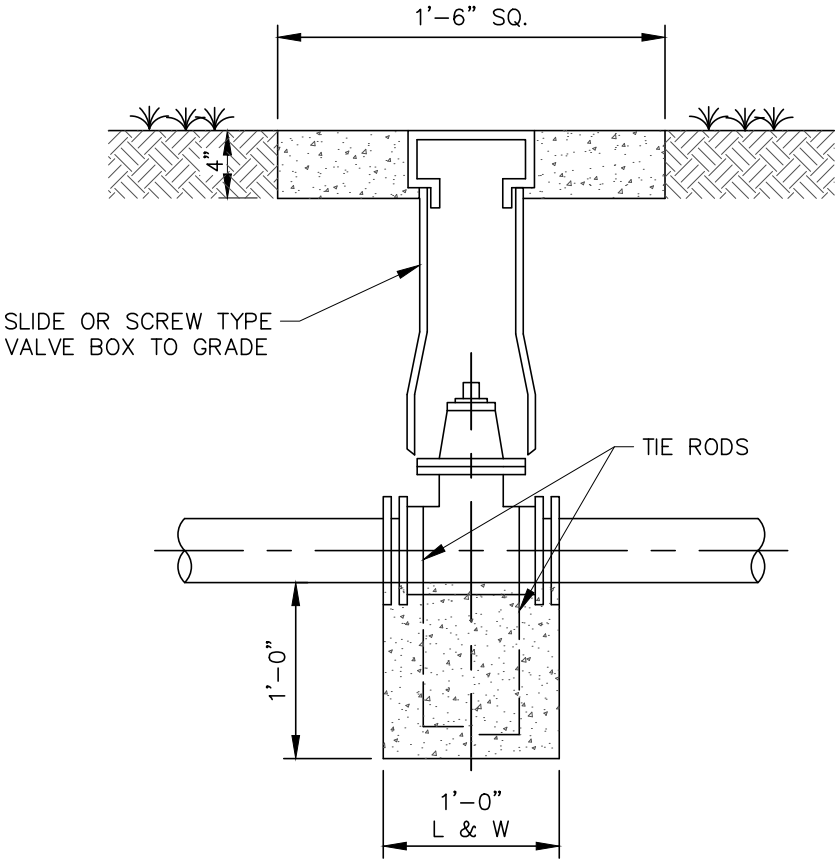


| CITY OF DAWSONVILLE | |
|---|---|
| DETAIL TITLE | DETAIL NO. |
| VALVE ANCHOR | 6.3 |

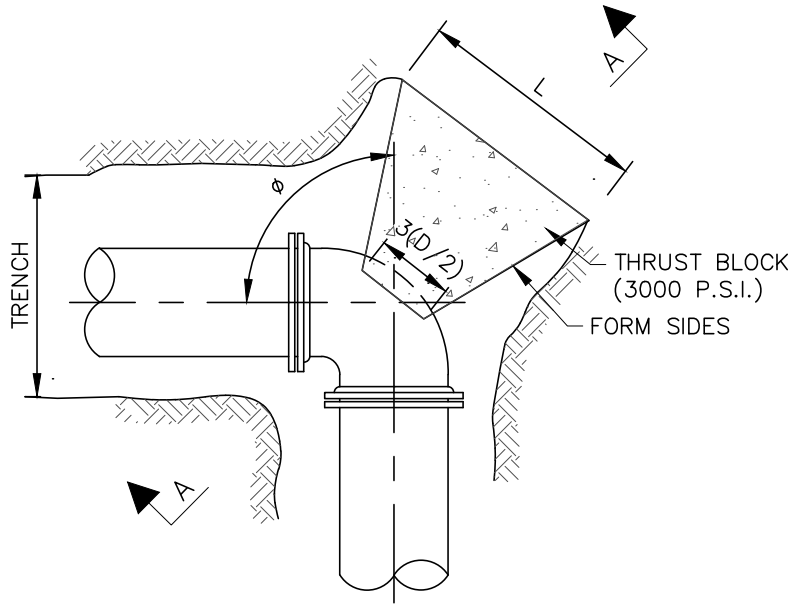


BEND PLAN

MINIMUM
DIMENSIONS FOR CONCRETE BLOCKING

| BEND | PIPE SIZE | 5D/2 | L | 3D/2 | W |
|---|---|---|---|---|---|
| 11 ¼° | 4" | 10" | 9" | 6" | 8" |
| | 6" | 15" | 14" | 9" | 12" |
| | 8" | 20" | 21" | 12" | 14" |
| | 10" | 25" | 28" | 15" | 16" |
| | 12" | 30" | 32" | 18" | 20" |
| | 16" | 40" | 41" | 24" | 27" |
| | 24" | 60" | 62" | 36" | 41" |
| 22 ½° | 4" | 10" | 9" | 6" | 8" |
| | 6" | 15" | 14" | 9" | 12" |
| | 8" | 20" | 21" | 12" | 14" |
| | 10" | 30" | 28" | 15" | 16" |
| | 12" | 40" | 32" | 18" | 20" |
| | 16" | 40" | 41" | 24" | 27" |
| | 24" | 60" | 62" | 36" | 41" |
| 45° | 4" | 10" | 14" | 6" | 10" |
| | 6" | 15" | 23" | 9" | 14" |
| | 8" | 20" | 31" | 12" | 18" |
| | 10" | 30" | 40" | 15" | 22" |
| | 12" | 40" | 48" | 18" | 26" |
| | 16" | 40" | 64" | 24" | 35" |
| | 24" | 60" | 96" | 36" | 52" |
| 90° | 4" | 10" | 19" | 6" | 14" |
| | 6" | 15" | 29" | 9" | 20" |
| | 8" | 20" | 40" | 12" | 26" |
| | 10" | 30" | 50" | 15" | 32" |
| | 12" | 40" | 61" | 18" | 38" |
| | 16" | 40" | 82" | 24" | 50" |
| | 24" | 60" | 153" | 36" | 60" |
| TEE | 4" | 10" | 15" | 6" | 12" |
| | 6" | 15" | 23" | 9" | 18" |
| | 8" | 20" | 31" | 12" | 24" |
| | 10" | 30" | 38" | 15" | 30" |
| | 12" | 40" | 46" | 18" | 36" |
| | 16" | 40" | 61" | 24" | 48" |
| | 24" | 60" | 92" | 36" | 71" |

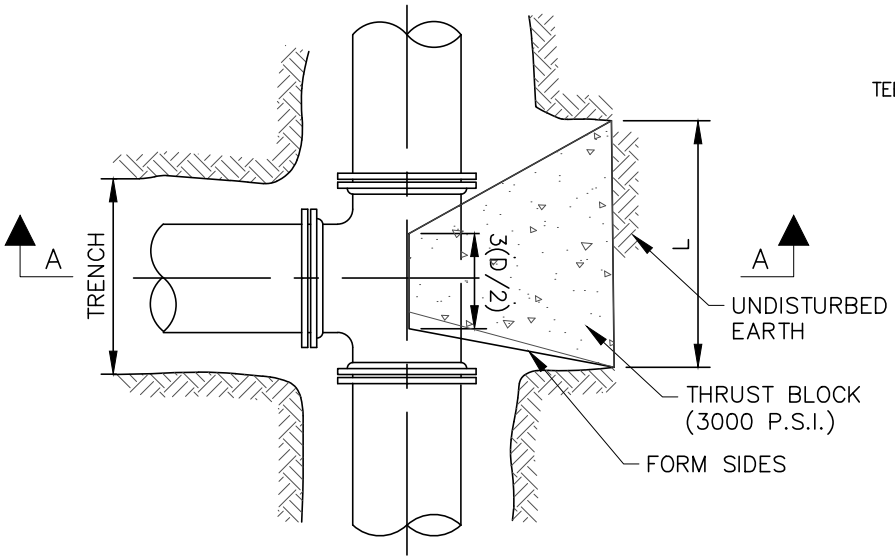


TEE PLAN

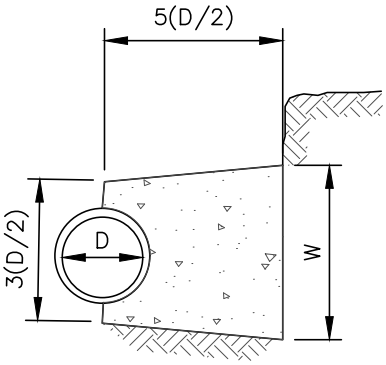


SECTION A–A

| CITY OF DAWSONVILLE | |
|---|---|
| DETAIL TITLE | DETAIL NO. |
| THRUST BLOCK DIMENSIONS | 7.1 |

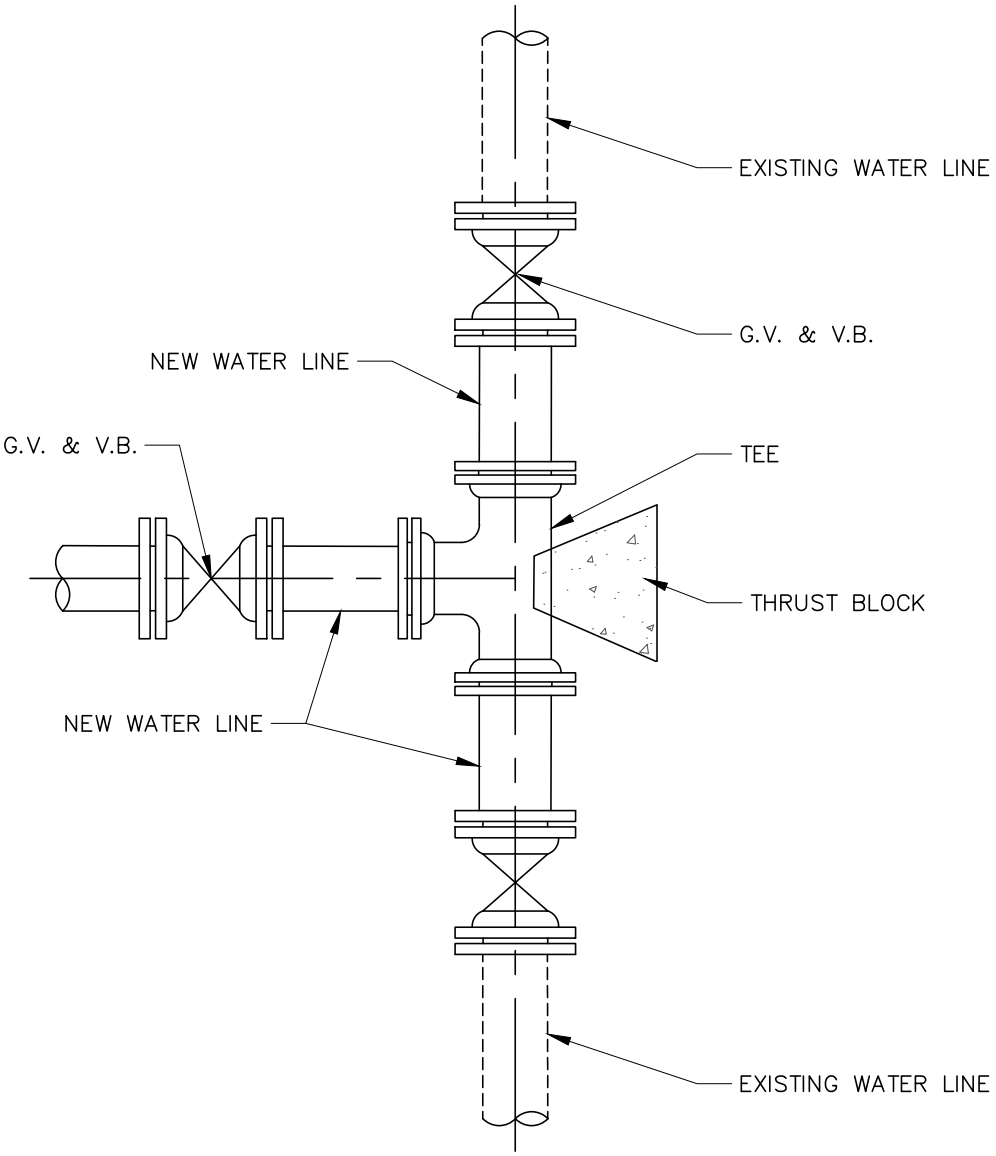


| CITY OF DAWSONVILLE | |
|---|---|
| DETAIL TITLE | DETAIL NO. |
| CONNECT TO EXISTING WATER LINE | 7.2 |

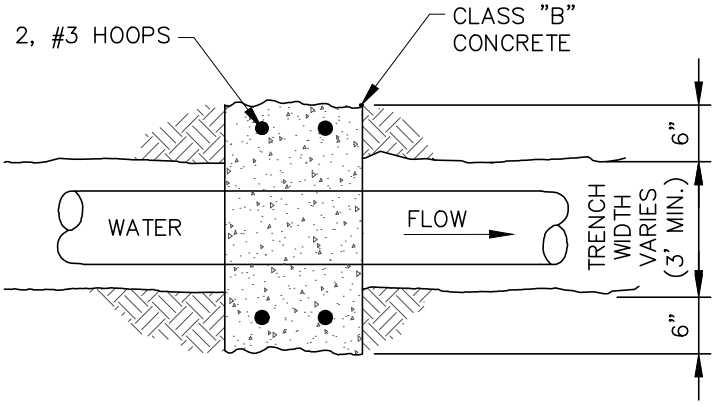


PLAN

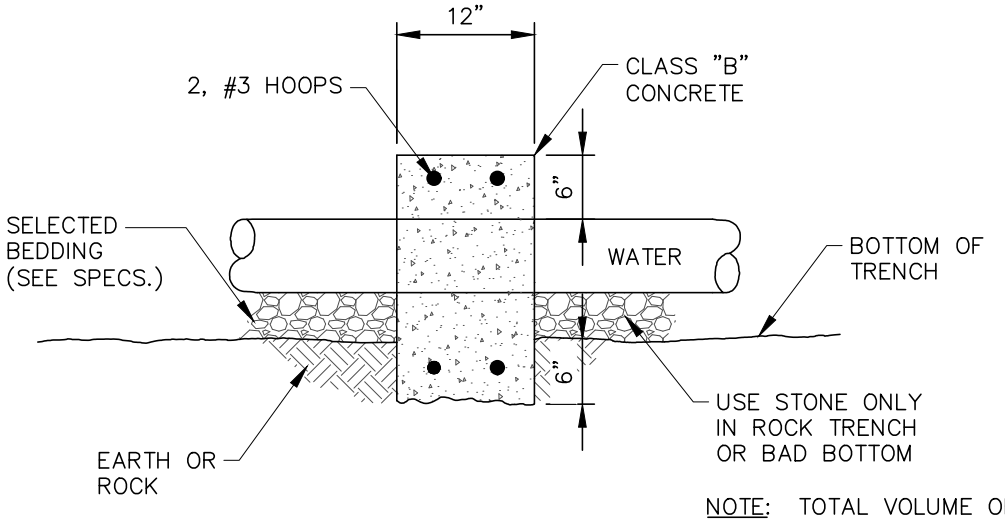


SECTION

NOTE: TOTAL VOLUME OF CONCRETE SHALL BE MINIMUM 10 CU. FT.

| CITY OF DAWSONVILLE | |
|---|---|
| DETAIL TITLE | DETAIL NO. |
| TYPICAL CONCRETE ANCHOR | 8.1 |

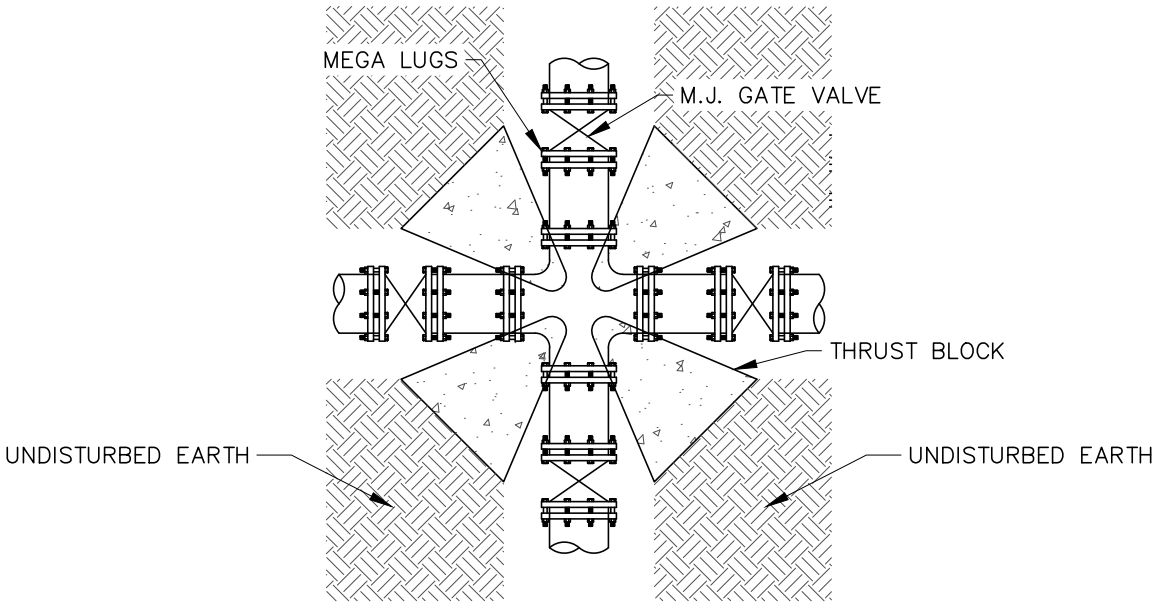


CROSS INSTALLATION

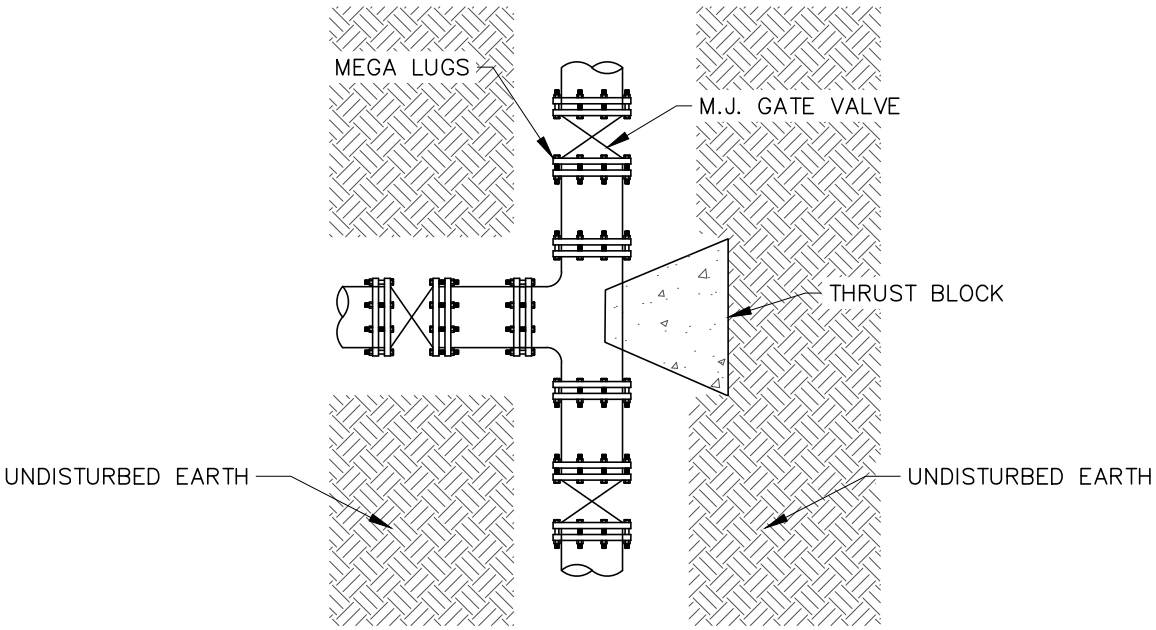


TEE INSTALLATION

NOTE:
1. ALL CONNECTIONS SHALL BE RESTRAINED JOINT USING MEGA LUGS.
2. BOLTS/NUTS SHALL BE PROTECTED FROM CONCRETE COVERAGE.

| CITY OF DAWSONVILLE | |
|---|---|
| DETAIL TITLE | DETAIL NO. |
| THRUST RESTRAINT AT FITTING | 9.1 |

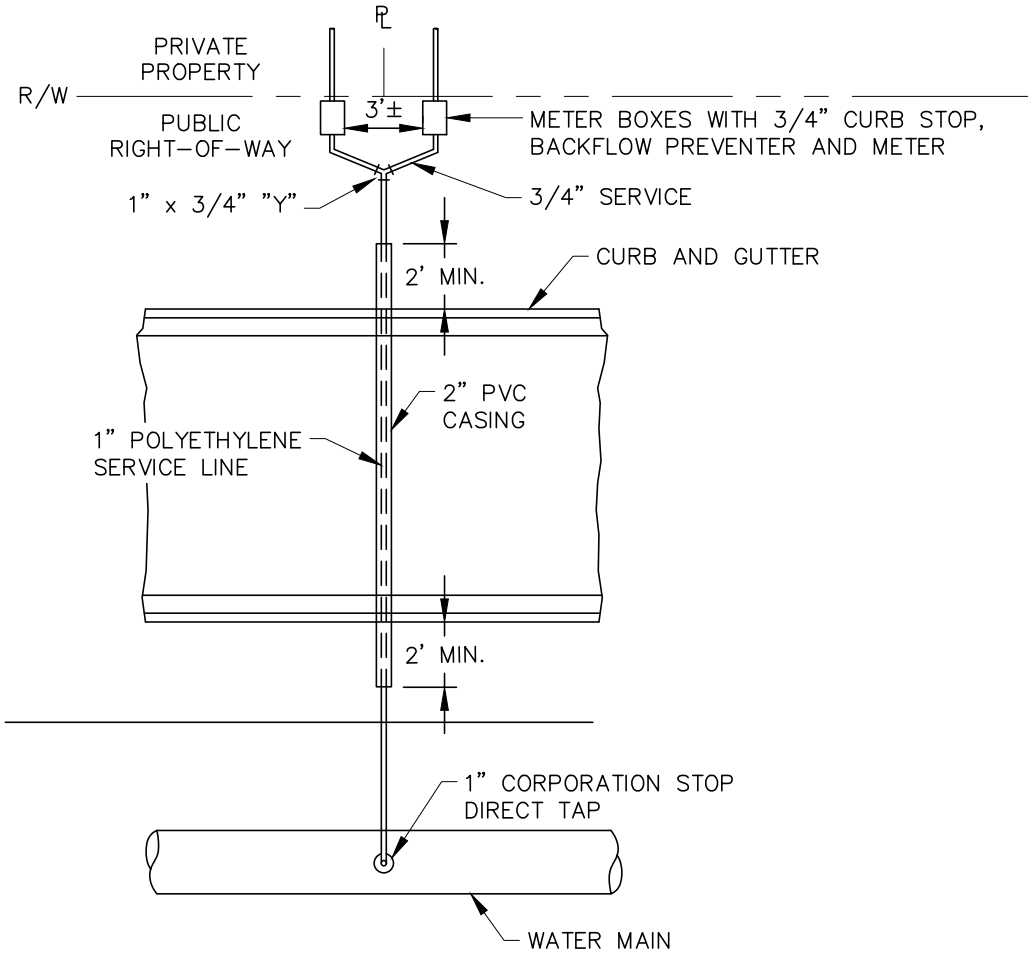


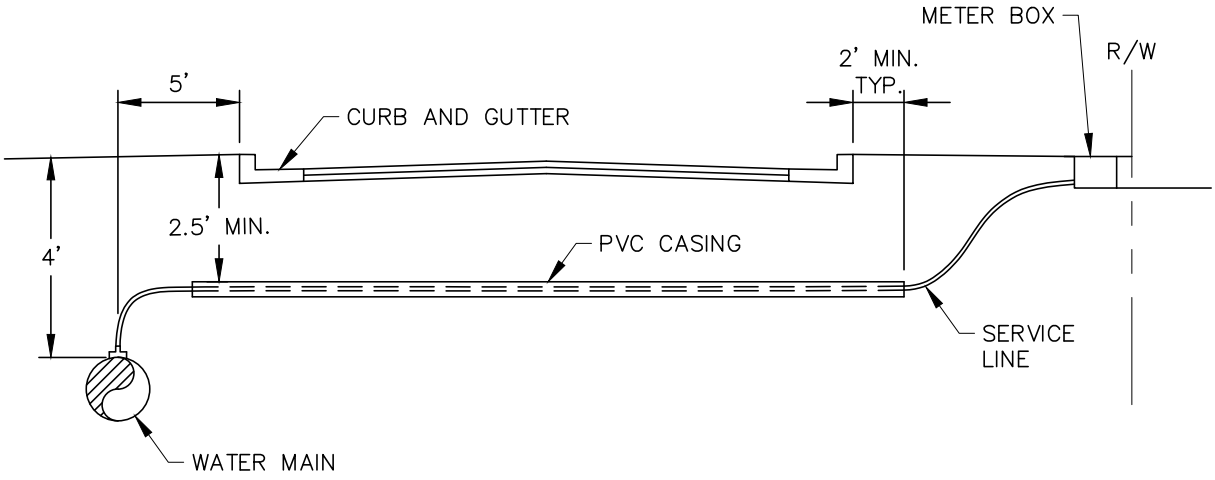


| CITY OF DAWSONVILLE | |
|---|---|
| DETAIL TITLE | DETAIL NO. |
| LONG SIDE SERVICE | 10.1 |

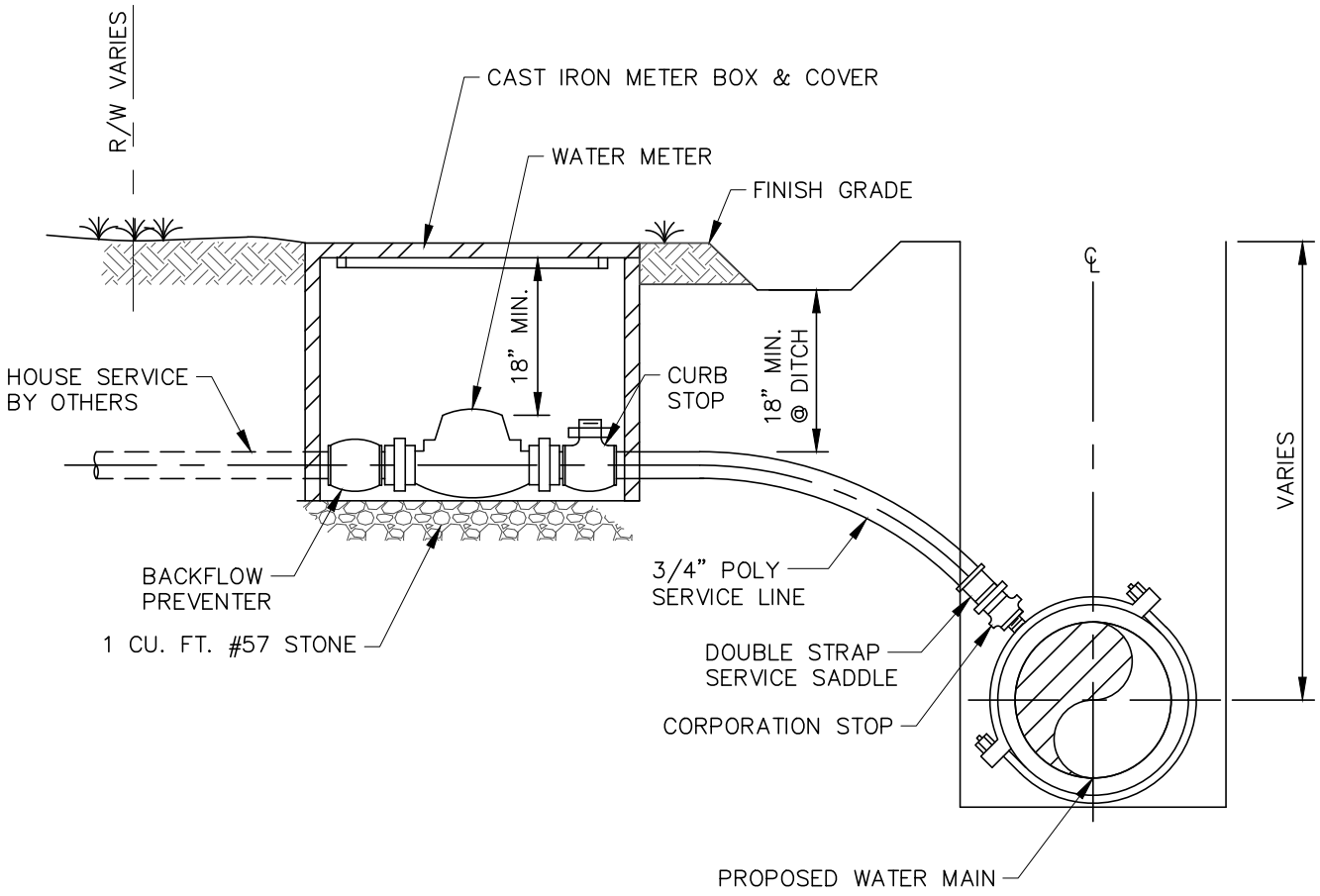


NOTE:

INSTALLATION SHALL ALLOW ADEQUATE ROOM TO REMOVE AND/OR REPAIR METER.

| CITY OF DAWSONVILLE | |
|---|---|
| DETAIL TITLE | DETAIL NO. |
| SHORT SIDE SERVICE | 11.1 |

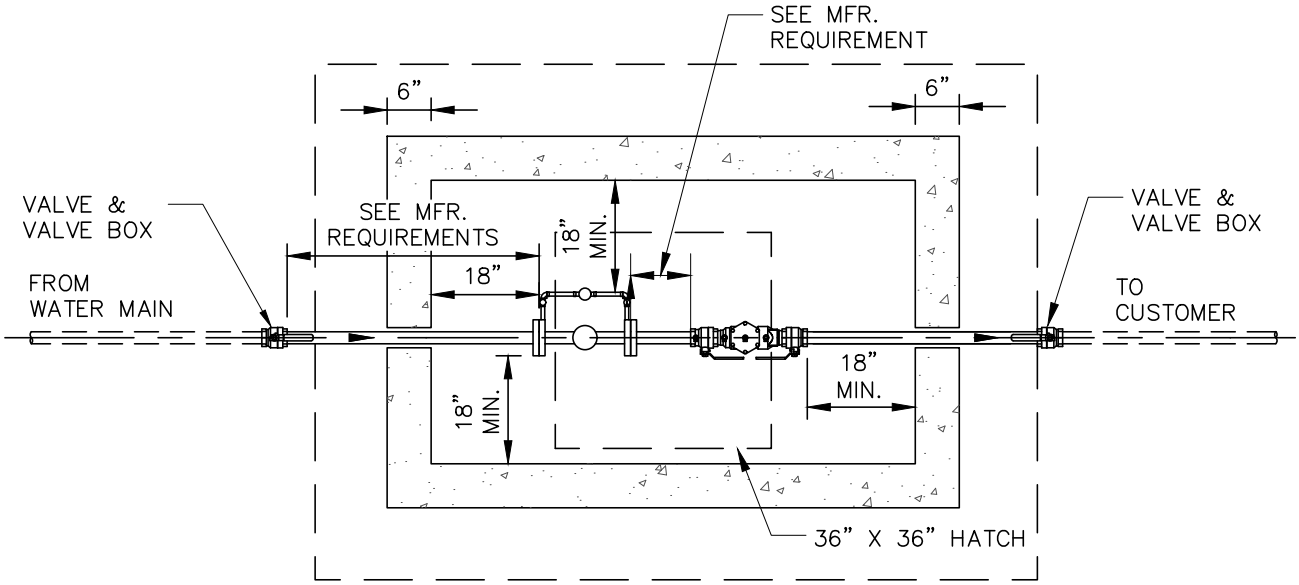


PLAN VIEW

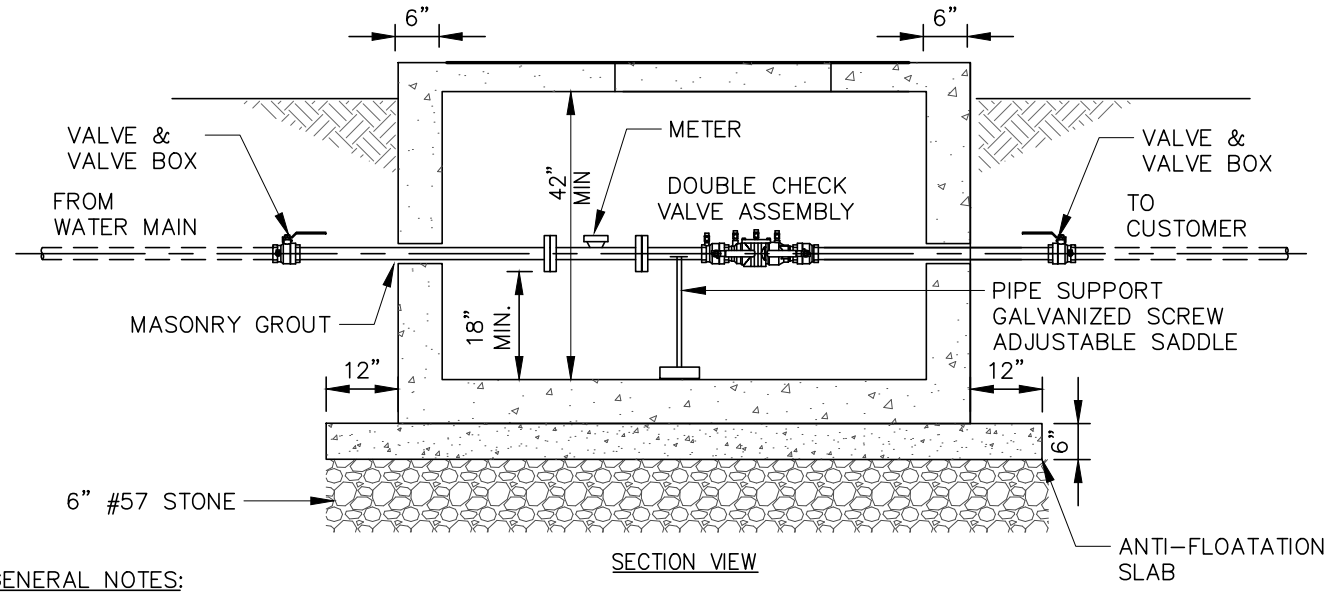


SECTION VIEW

GENERAL NOTES:

1. LOCATION OF PIT SHALL BE DETERMINED IN THE FIELD BY THE ENGINEER.
2. ALL PIPING SHALL HAVE 18" OF CLEARANCE ON ALL SIDES.
3. CONTRACTOR SHALL SUPPORT ALL PIPING INSIDE PIT AS REQUIRED (2 PLACES).
4. CONTRACTOR MAY USE PRECAST CONCRETE OR POLYMER REINFORCED CONCRETE VAULT IN LIEU OF CAST IN PLACE VAULT.
5. IF POLYMER REINFORCED CONCRETE VAULTS ARE USED, THEY SHALL BE ANSI TIER 22 RATED AND HAVE ADEQUATE PROTECTION AGAINST BUOYANCY.
6. CONTRACTOR MAY INSTALL METER AND BACKFLOW PREVENTER IN TWO SEPARATE VAULTS.
7. ALL EXCAVATION INCLUDING TRENCHING, BORE PITS, ETC., SHALL BE BACKFILLED AT THE END OF EACH WORK DAY.
8. STRAIGHT PIPE REQUIREMENTS UPSTREAM AND DOWNSTREAM OF METER SHALL BE AS SPECIFIED BY THE METER MANUFACTURER.
9. VAULT SHALL HAVE 12" ø DRAIN.

| CITY OF DAWSONVILLE | |
|---|---|
| DETAIL TITLE | DETAIL NO. |
| 2" METER | 12.1 |

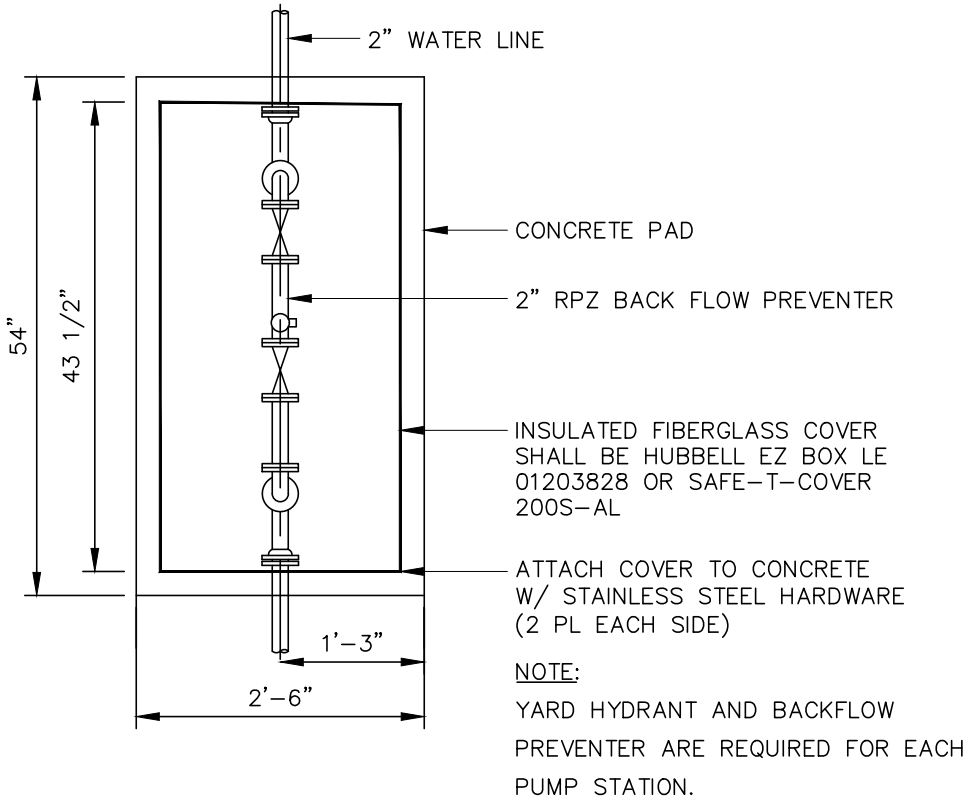


NOTE:

YARD HYDRANT AND BACKFLOW PREVENTER ARE REQUIRED FOR EACH PUMP STATION.

PLAN

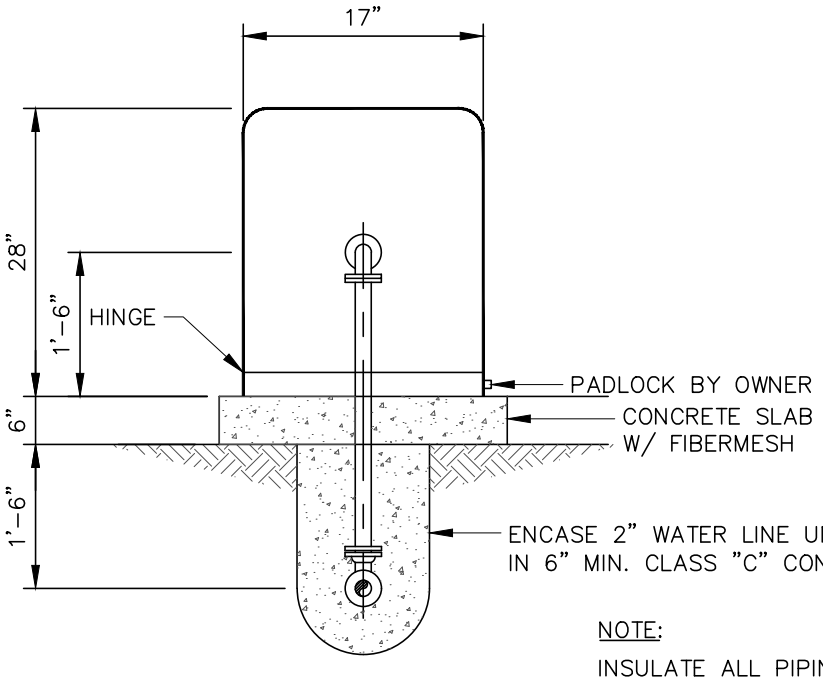


NOTE:

INSULATE ALL PIPING ABOVE GRADE.

SECTION

| CITY OF DAWSONVILLE | |
|---|---|
| DETAIL TITLE | DETAIL NO. |
| 2" RPZ BACK FLOW PREVENTER DETAIL | 12.2 |

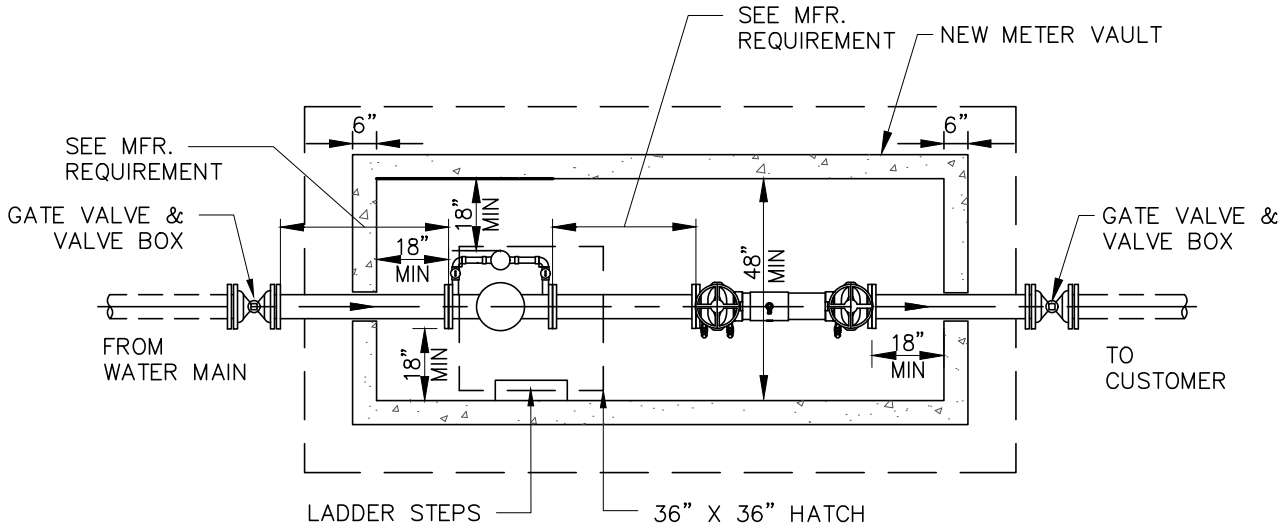


PLAN VIEW

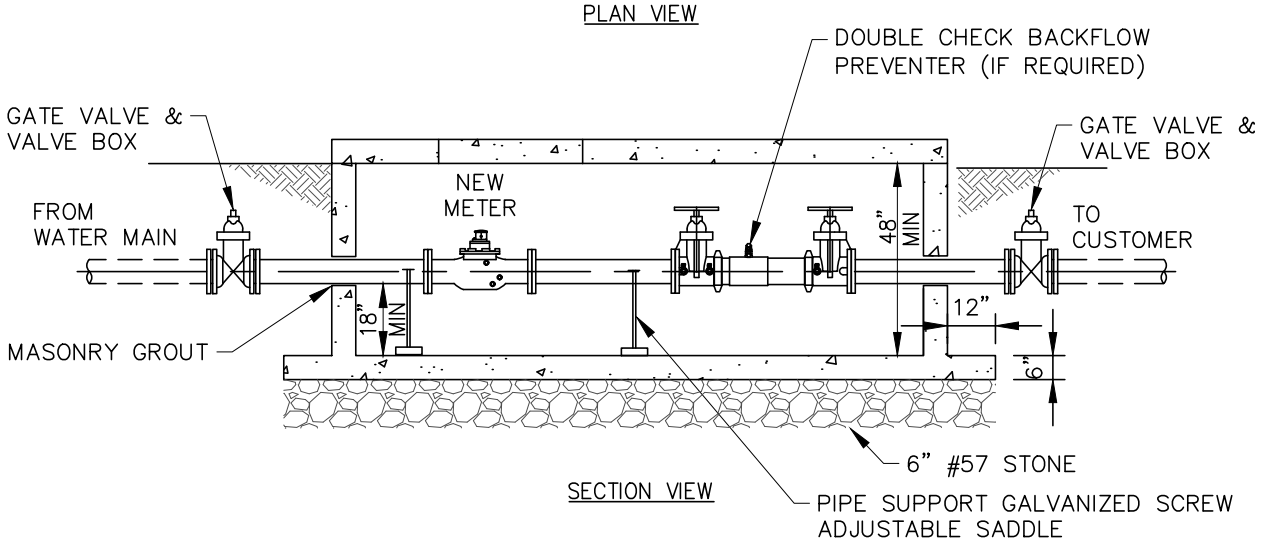


SECTION VIEW

GENERAL NOTES:

1. LOCATION OF PIT SHALL BE DETERMINED IN THE FIELD BY THE ENGINEER.
2. ALL PIPING SHALL BE DUCTILE IRON.
3. ALL PIPING SHALL HAVE 18 INCHES OF CLEARANCE ON ALL SIDES.
4. CONTRACTOR SHALL SUPPORT ALL PIPING INSIDE PIT AS REQUIRED (2 PLACES).
5. CONTRACTOR MAY USE PRECAST CONCRETE OR POLYMER REINFORCED CONCRETE VAULT IN LIEU OF CAST IN PLACE VAULT.
6. IF POLYMER REINFORCED CONCRETE VAULTS ARE USED, THEY SHALL BE ANSI TIER 22 RATED AND HAVE ADEQUATE PROTECTION AGAINST BUOYANCY.
7. CONTRACTOR MAY INSTALL METER AND BACKFLOW PREVENTER IN TWO SEPARATE VAULTS.
8. ALL EXCAVATION INCLUDING TRENCHING, BORE PITS, ETC., SHALL BE BACKFILLED AT THE END OF EACH WORK DAY.
9. STRAIGHT PIPE REQUIREMENTS UPSTREAM AND DOWNSTREAM OF METER SHALL BE AS SPECIFIED BY THE METER MANUFACTURER.
10. VAULT SHALL HAVE 12" ø DRAIN.

| CITY OF DAWSONVILLE | |
|---|---|
| DETAIL TITLE | DETAIL NO. |
| 3" DOMESTIC METER AND LARGER | 13.1 |

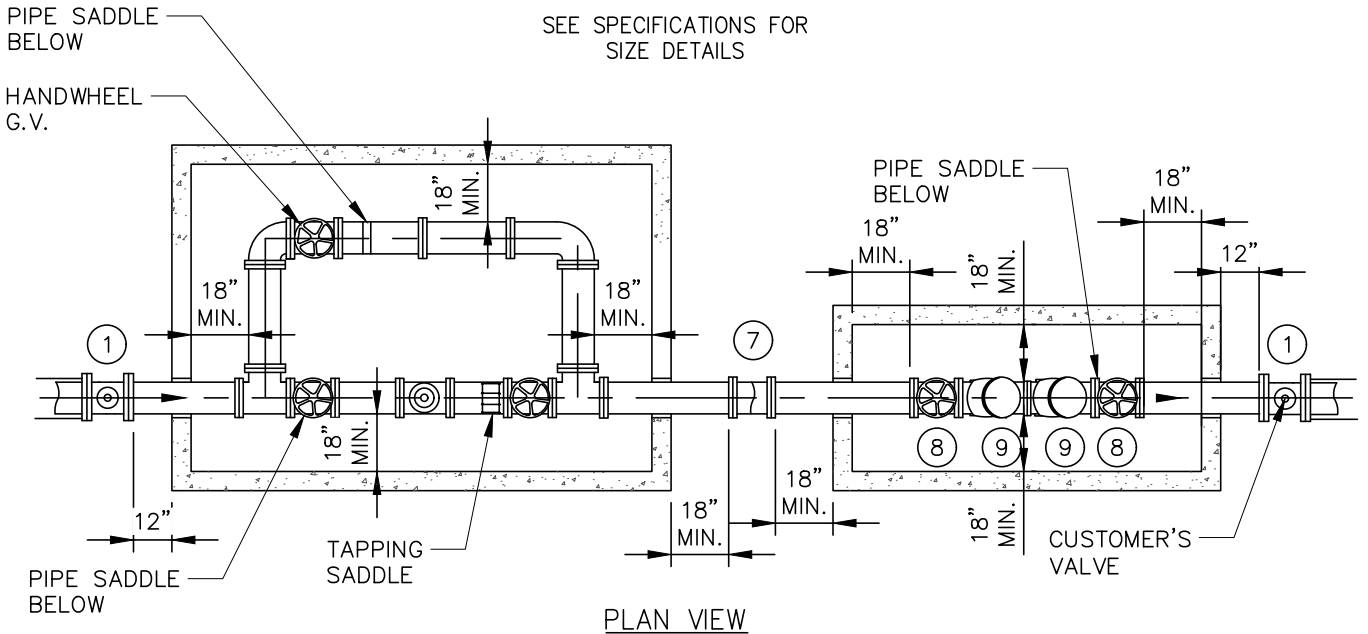


PLAN VIEW

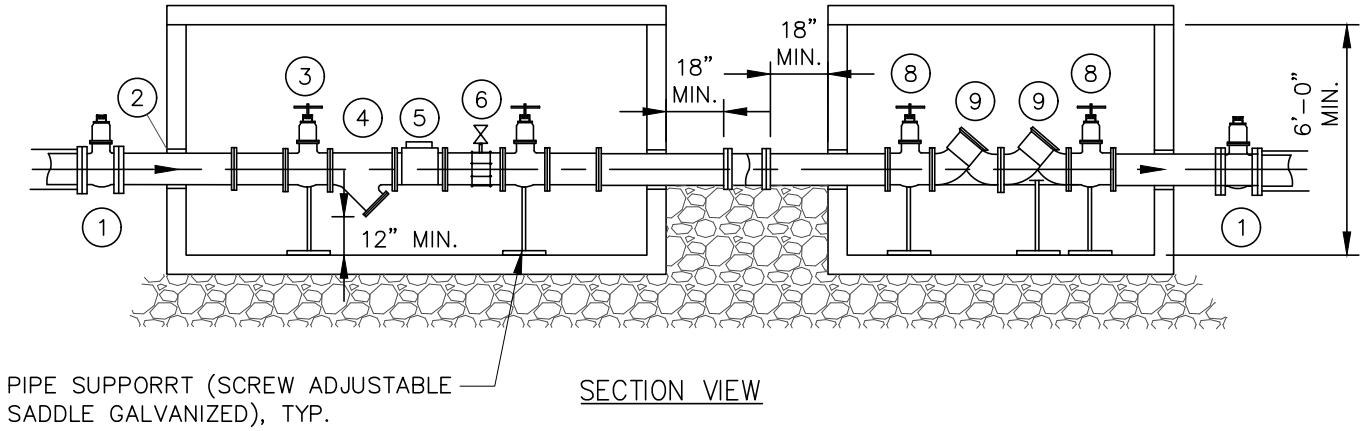


SECTION VIEW

1. MECHANICAL JOINT x FLANGE GATE VALVE W/ NUT OPERATOR.
2. LINK-SEAL (TYPICAL)
3. HANDWHEEL GATE VALVE
4. STRAINER
5. METER
6. TAPPING SADDLE (LOCATE TAP A MIN. 3 PIPE DIAMETERS DOWNSTREAM OF METER) 2" 1/4 TURN BRASS BALL VALVE
7. M.J. SLEEVE WITHE MEGA LUG
8. OS & Y GATE VALVES
9. DOUBLE CHECK VALVE ASSEMBLY (WATTS 757)

NOTE:

1. PIPE TAPS SHALL BE PERFORMED USING A WATER COOLED CORE DEVICE PIPE SHALL NOT BE TAPPED USING CUTTING TORCH.
2. METER AND CHECK BACK FLOW PREVENTER MAY BE IN SAME VAULT.

| CITY OF DAWSONVILLE | |
|---|---|
| DETAIL TITLE | DETAIL NO. |
| FIRE METER | 14.1 |

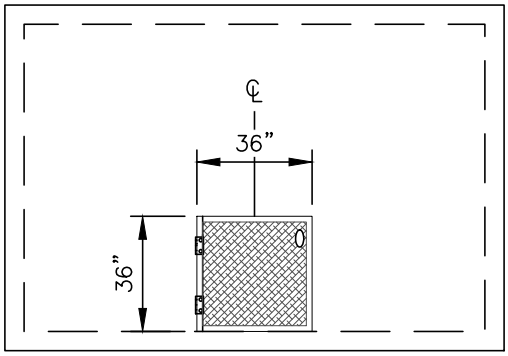


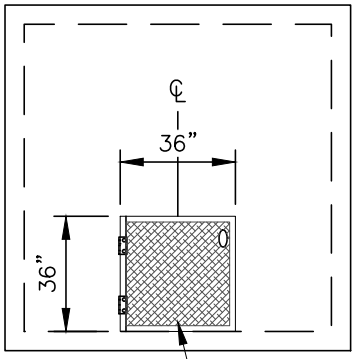


36" x 36"
ALUMINUM ACCESS
HATCH, TYP.

TOP VIEW

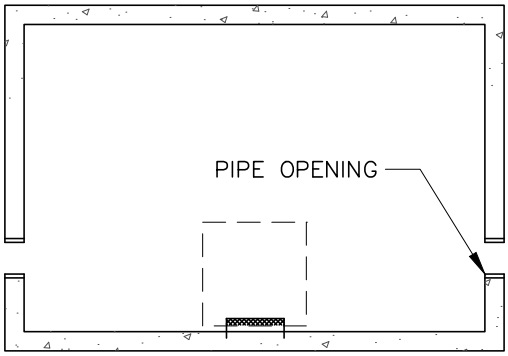


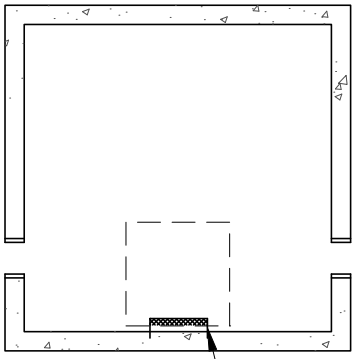

MANHOLE STEPS
@ 15" O.C.

PLAN VIEW

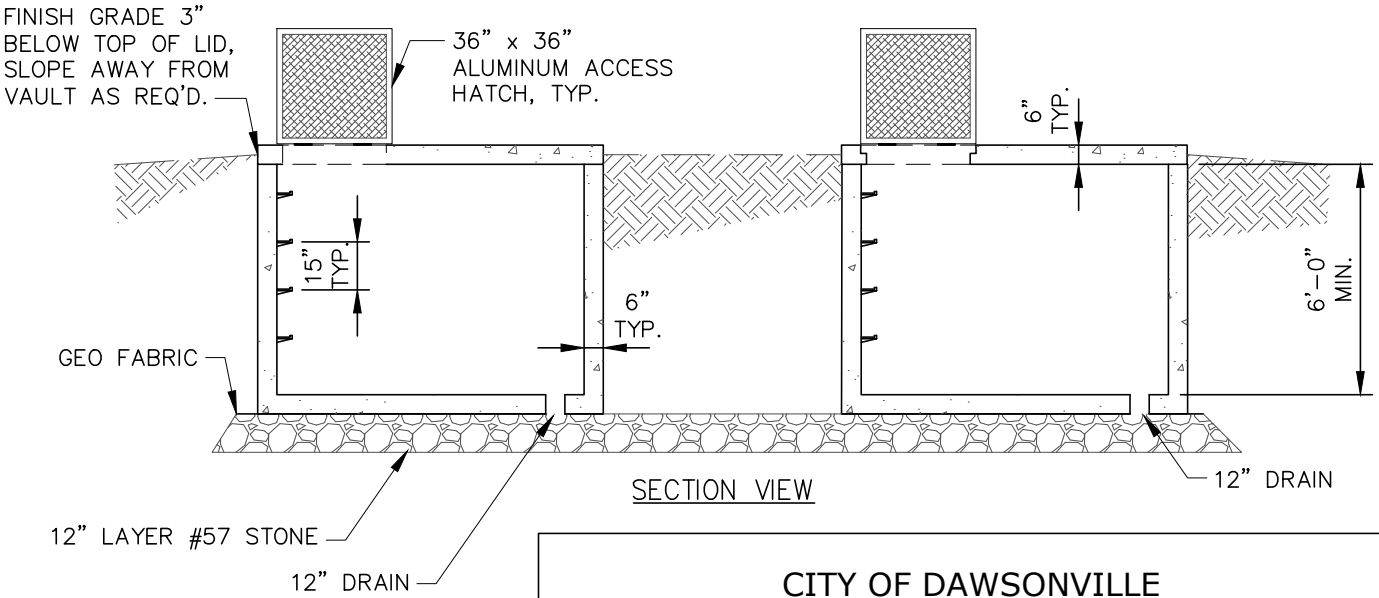


SECTION VIEW

| CITY OF DAWSONVILLE | |
|---|---|
| DETAIL TITLE | DETAIL NO. |
| FIRE METER VAULT | 15.1 |

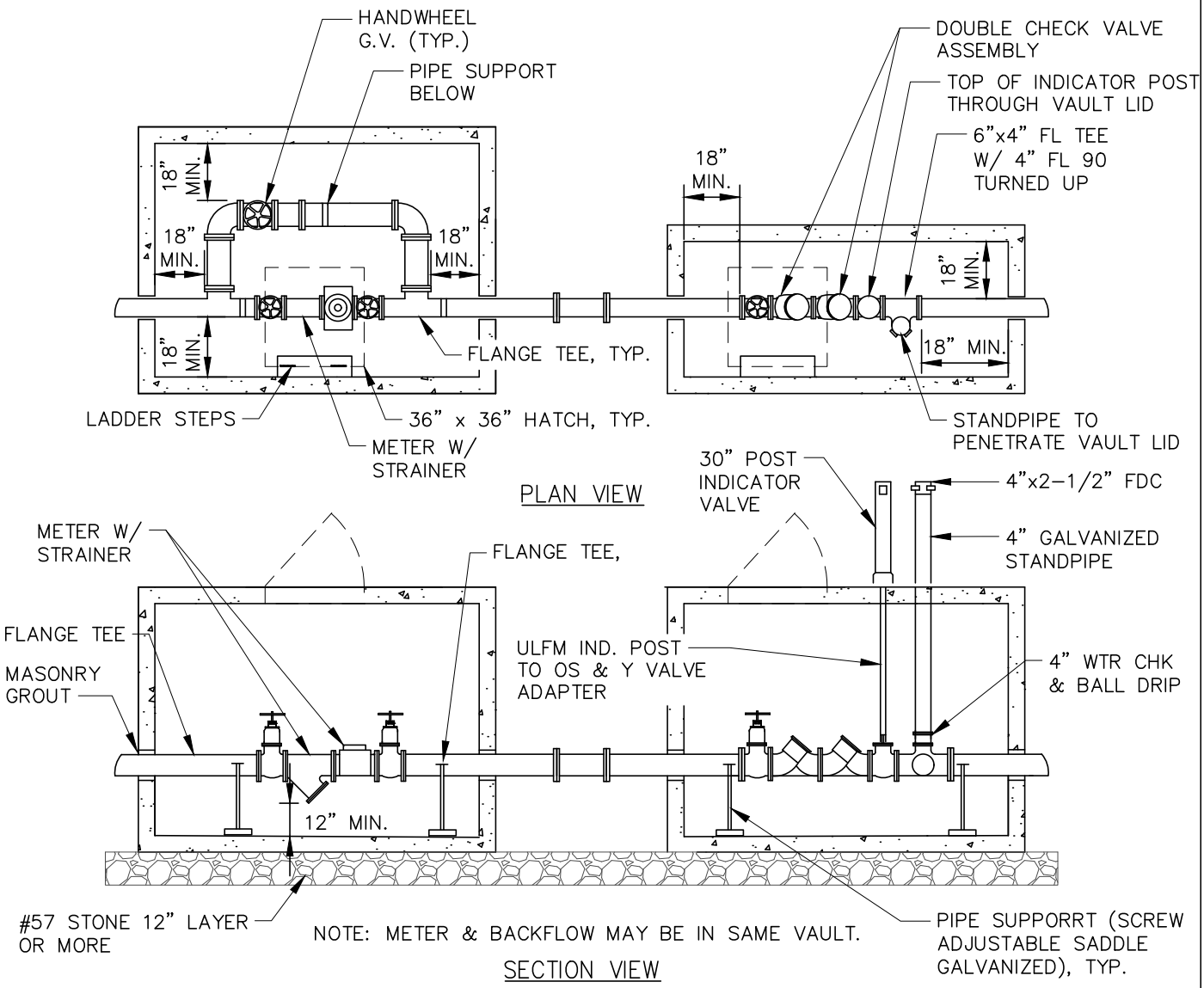


NOTE:

1. VAULT TO BE SIZED TO ALLOW 18" MIN. CLEARANCE AROUND ALL INSTALLED EQUIPMENT.
2. VAULT COATING TO BE
   A. BITUMINOUS TAR ON UNDERGROUND PORTION OF VAULT.
   B. ASSEMBLY TO BE COATED WITH SPECIAL NON-SKID EPOXY.
3. THE HATCHES SHALL BE CONSTRCUTED W/ 6" DEEP FRAME AND OF 1/4" DIAMOND PLATE ALUMINUM.
4. THE HATCHES SHALL BE REINFORCED FOR H-20 LOADING, AND SHALL HAVE A FALL-IN-PLACE HOLD-OPEN ARM AND STAINLESS STEEL SNAP LOCK.
5. HATCHES SHALL MEET ALL CURRENT ASTM STANDARDS.
6. SIX (6") INCH THICK PRECAST CONCRETE SHALL BE USED FOR CONSTRUCTION AS A MINIMUM.
7. 12" LAYER OF #57 STONE, 12" LARGER THAN FOOTPRINT OF VAULT.
8. VAULT SHALL HAVE 12" ø DRAIN.
9. POSITION HATCH OVER METER & ALIGN EDGE AGAINST VAULT INTERIOR WALL.

| CITY OF DAWSONVILLE | |
|---|---|
| DETAIL TITLE | DETAIL NO. |
| FDC VAULT | 16.1 |

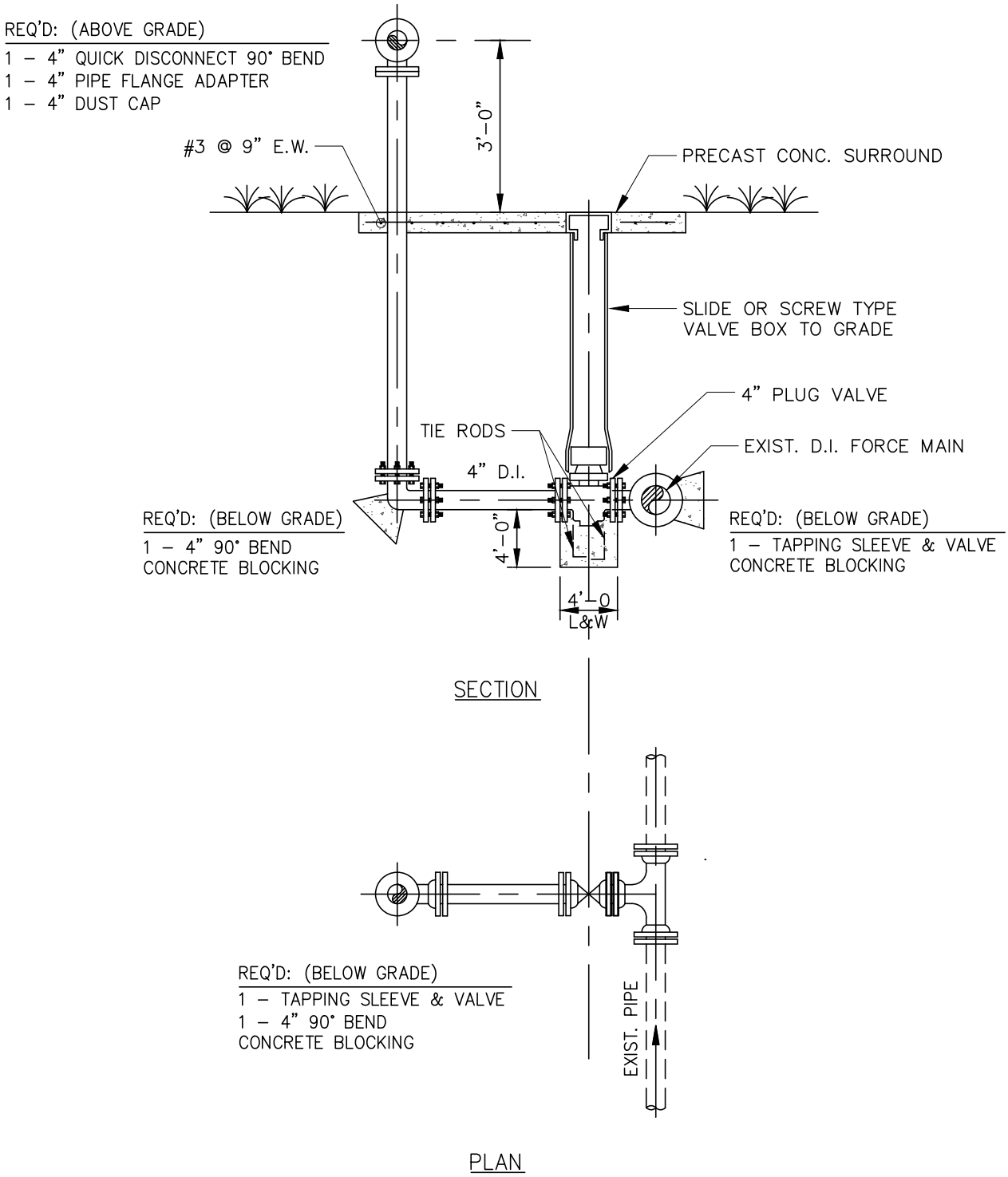


| CITY OF DAWSONVILLE | |
|---|---|
| DETAIL TITLE | DETAIL NO. |
| RAW SEWAGE PUMP STATION<br>EMERGENCY BY-PASS CONNECTION | 17.1 |

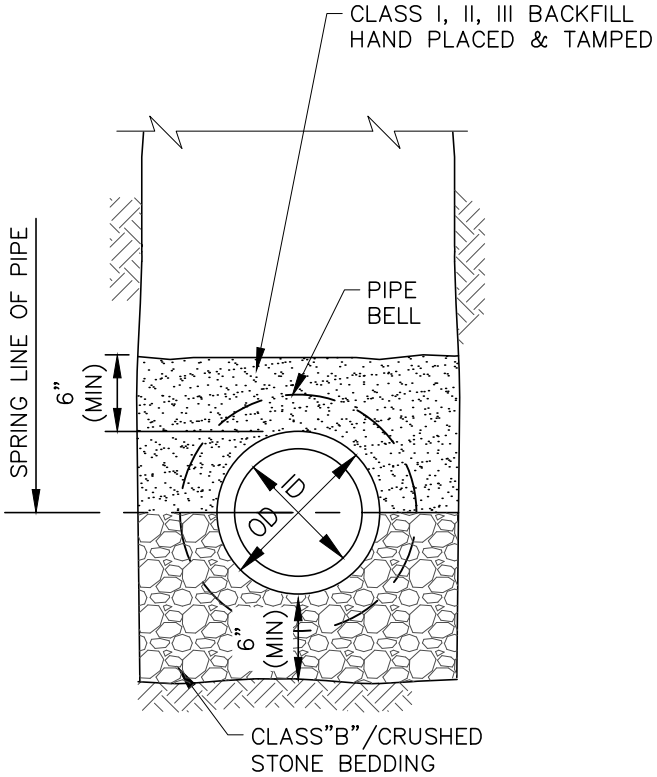


NOTE:

1. UNSUITABLE SOILS ENCOUNTERED IN BOTTOM OF EXCAVATED TRENCH SHALL BE EXCAVATED & REPLACED WITH #57 STONE.
2. ONLY SUITABLE SOIL SHALL BE USED AS BACKFILL.

| CITY OF DAWSONVILLE | |
|---|---|
| DETAIL TITLE | DETAIL NO. |
| TYPICAL PVC SEWER PIPE BEDDING | 18.1 |

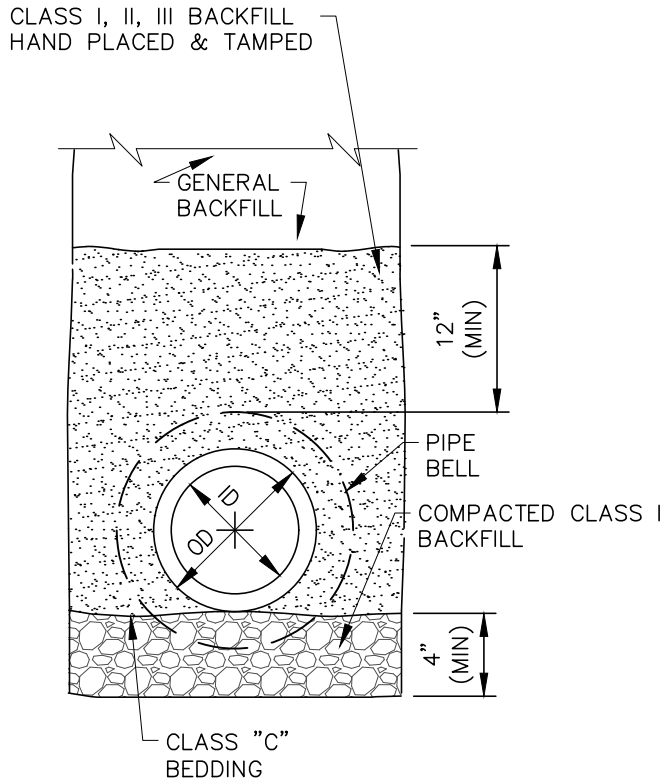


DUCTILE IRON

NOTE: APPLICABLE TO BOTH EARTH * ROCK TRENCHES

MAX. DEPTH OF COVER FOR DUCTILE IRON PIPE OF THE VARIOUS CLASSES & SIZES TO BE INSTALLED ARE AS FOLLOWS:

LAYING CONDITION – DUCTILE IRON

| | | | MAX. DEPTH & COVER (FT.) | |
|---|---|---|---|---|
| | | | (1) | (2) |
| PIPE SIZE IN | THICK CLASS | NOMINAL THICK IN | FLAT BOT TRENCH | SELECTED MATERIAL |
| 8 | 50 | 0.27 | 46 | 64 |
| | 51 | 0.30 | 61 | 81 |
| | 52 | 0.33 | 77 | 99 |

| CITY OF DAWSONVILLE | |
|---|---|
| DETAIL TITLE | DETAIL NO. |
| TYPICAL DUCTILE IRON SEWER PIPE BEDDING | 18.2 |

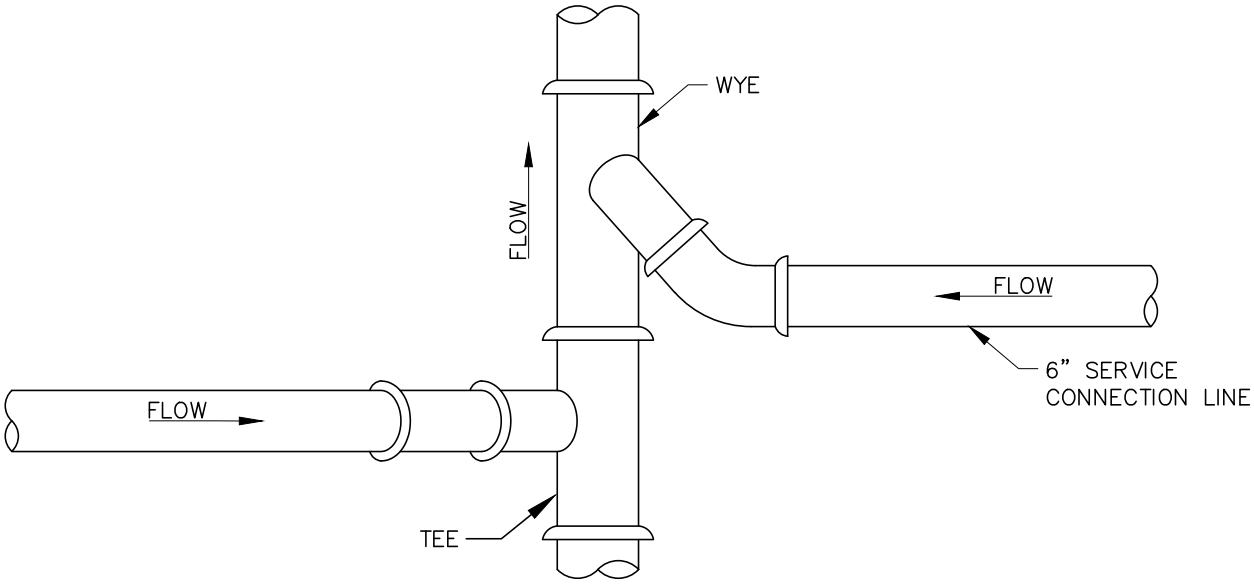


PLAN

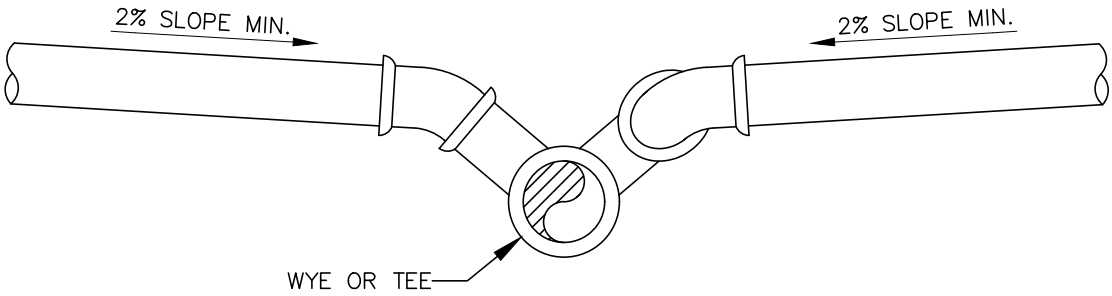


SECTION

NOTE:

1. CONNECTION TO NEW SEWER SHALL BE WITH TEE OR WYE.
2. NO TEES OR WYES ON SEWERS LARGER THAN 18" ø.

| CITY OF DAWSONVILLE | |
|---|---|
| DETAIL TITLE | DETAIL NO. |
| SEWER LATERAL CONNECTION | 19.1 |

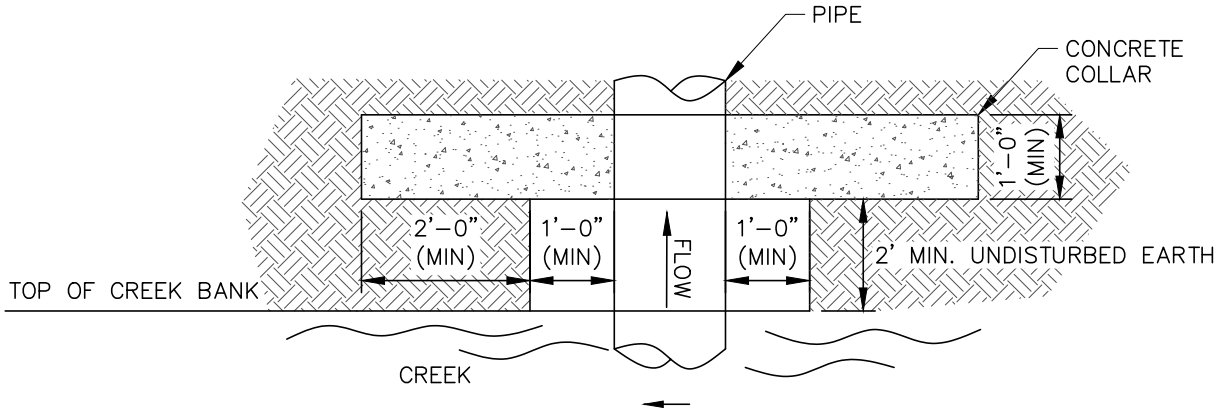


PLAN VIEW

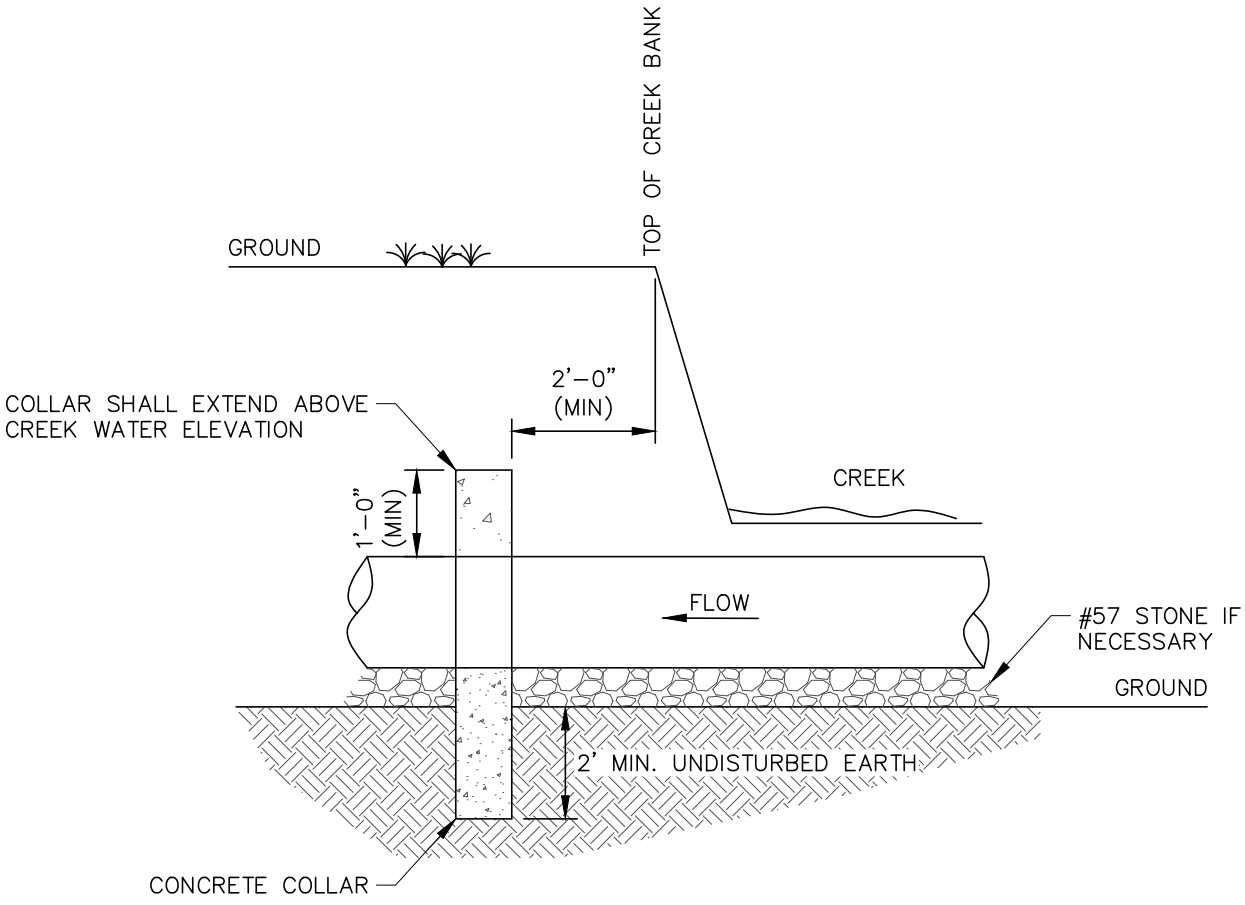


SIDE VIEW

| CITY OF DAWSONVILLE | |
|---|---|
| DETAIL TITLE | DETAIL NO. |
| PIPE COLLAR | 20.1 |

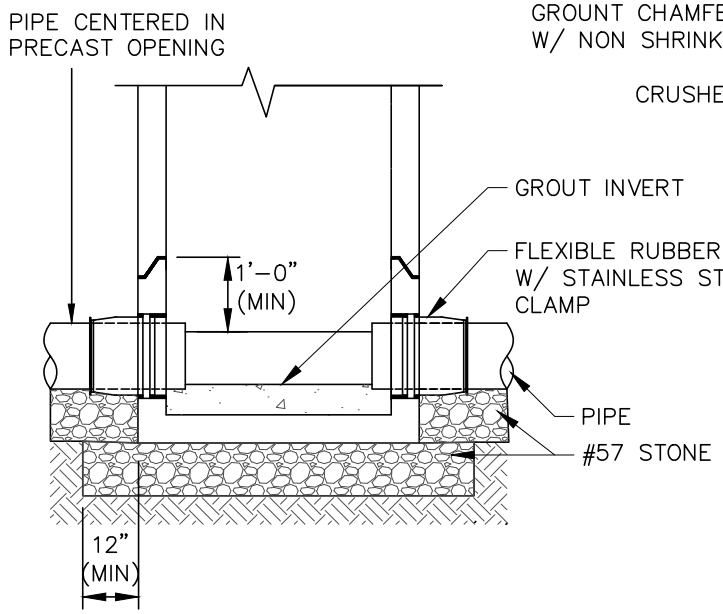


MANHOLE SECTION

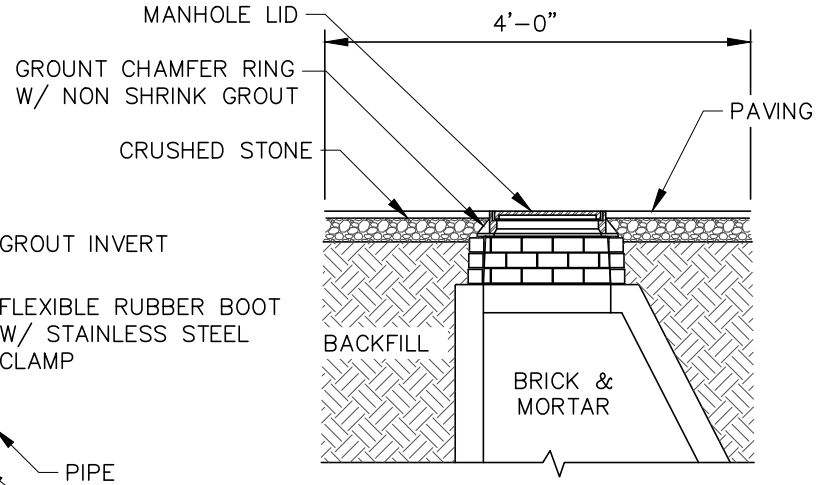


NOTE:

1. BRICKS SHALL BE STACKED NO MORE THAN THREE COURSES.
2. BRICKS SHALL BE BEDDED AND JOINTED IN MORTAR PER CITY SPECIFICATIONS.
3. CONTRACTOR SHALL APPLY A MINIMUM 1/2" THICK MORTAR COATING (SMOOTH FINISH) TO INTERIOR FACE OF BRICK.

TYPICAL MANHOLE IN PAVEMENT DETAIL

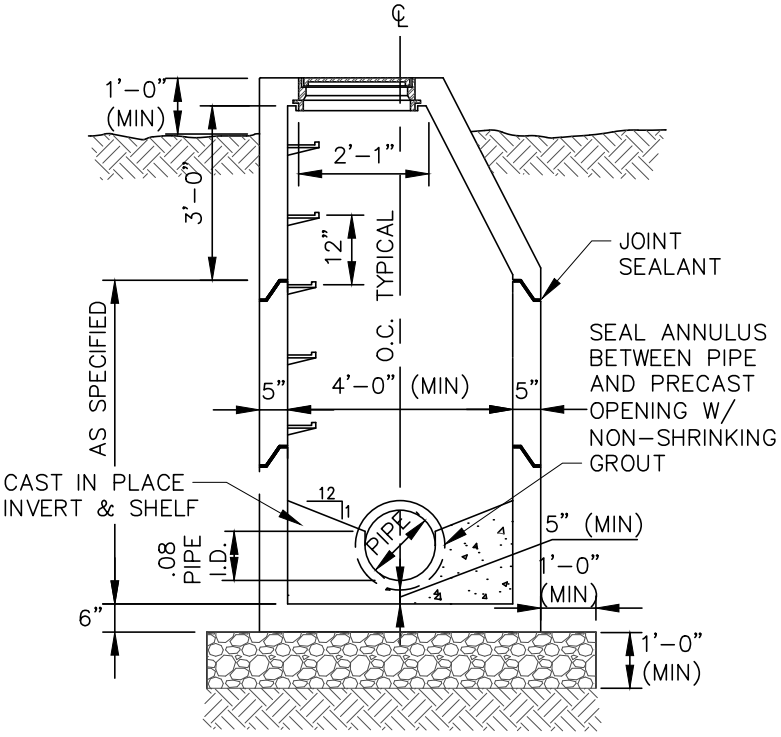


MANHOLE SECTION

NOTE:

1. PRECAST MANHOLE SECTIONS SHALL BE MANUFACTURED IN ACCORDANCE W/ ASTM C 478, AS AMMENDED TO DATE.
2. CONCRETE SHALL HAVE A MINIMUM COMPRESSIVE STRENGTH OF 4,000 PSI WHEN TESTED IN ACCORDANCE W/ ASTM C 478.
3. WHEN BRICK IS USED AS FILLER, PROVIDE MINIMUM 2" GROUT OVER BRICK.
4. LINE MANHOLE IN ACCORDANCE W/ DIVISION III, SECTION 9 OF THE SPECIFICATIONS.

| CITY OF DAWSONVILLE | |
|---|---|
| DETAIL TITLE | DETAIL NO. |
| MANHOLE SECTIONS | 21.1 |

| SCHEDULE FOR DROP CONNECTIONS DIMENSION "X" | | |
|---|---|---|
| PIPE SIZE | DROP SIZE | MIN. DROP |
| 6" | 6" | 24" |
| 8" | 8" | 24" |
| 10" | 8" | 24" |
| 12" | 10" | 35" |
| 15" | 12" | 37" |
| 18" | 15" | 39" |
| 21" | 18" | 41" |
| 24" | 18" | 43" |
| 30" | 18" | 45" |

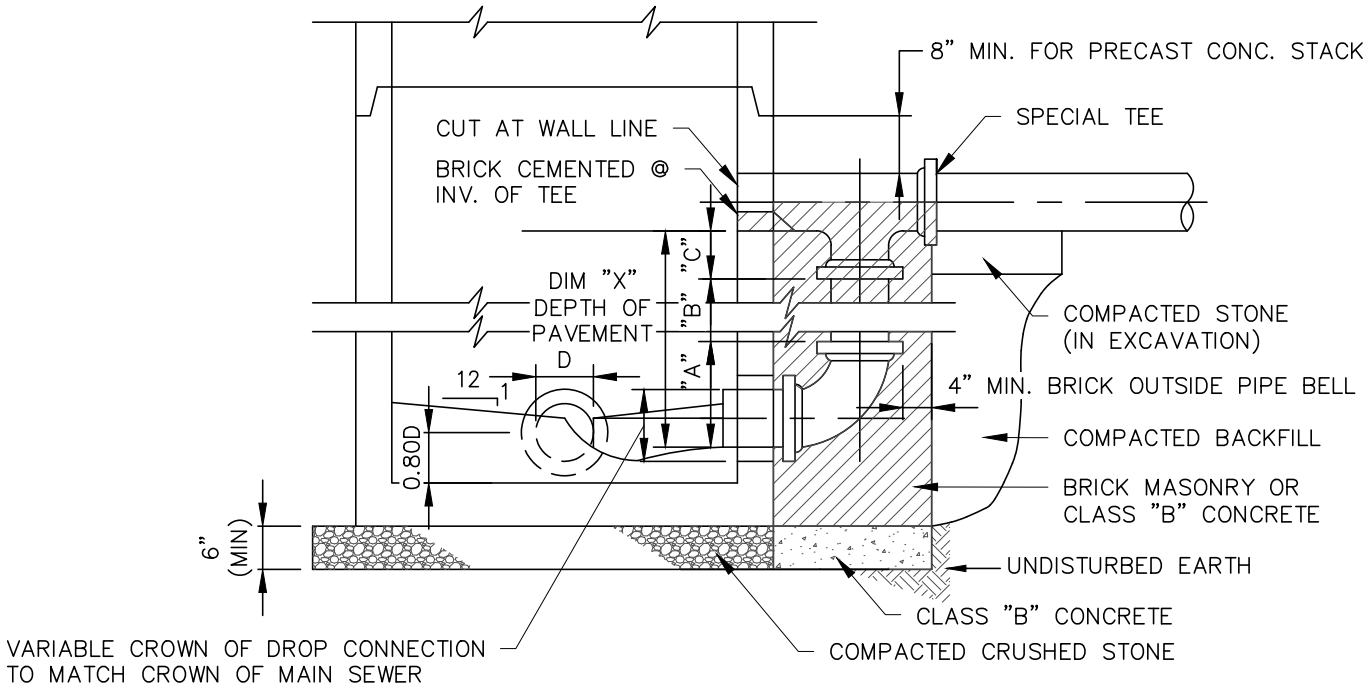


NOTE: ALL PIPING INSIDE MANHOLE SHALL BE DUCTILE IRON W/ STAINLESS STEEL HARDWARE.

| CITY OF DAWSONVILLE | |
|---|---|
| DETAIL TITLE | DETAIL NO. |
| TYPICAL DROP MANHOLE CONNECTION DETAIL | 21.2 |

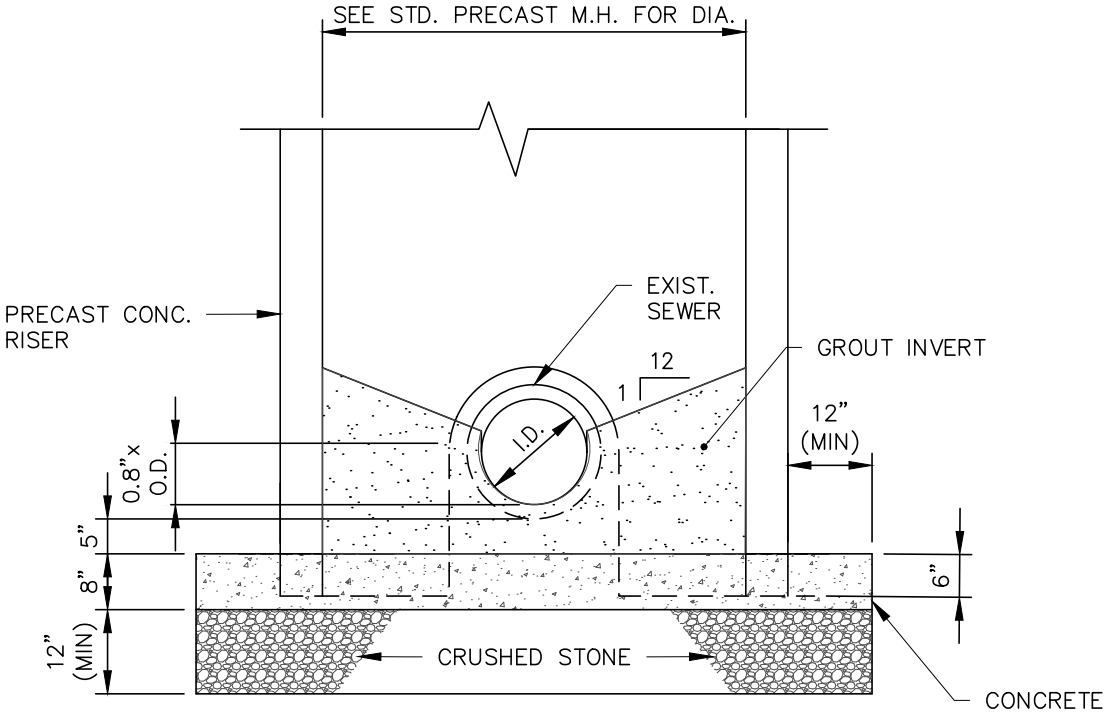


| CITY OF DAWSONVILLE | |
|---|---|
| DETAIL TITLE | DETAIL NO. |
| TYPICAL DOG HOUSE MANHOLE DETAIL | 21.3 |

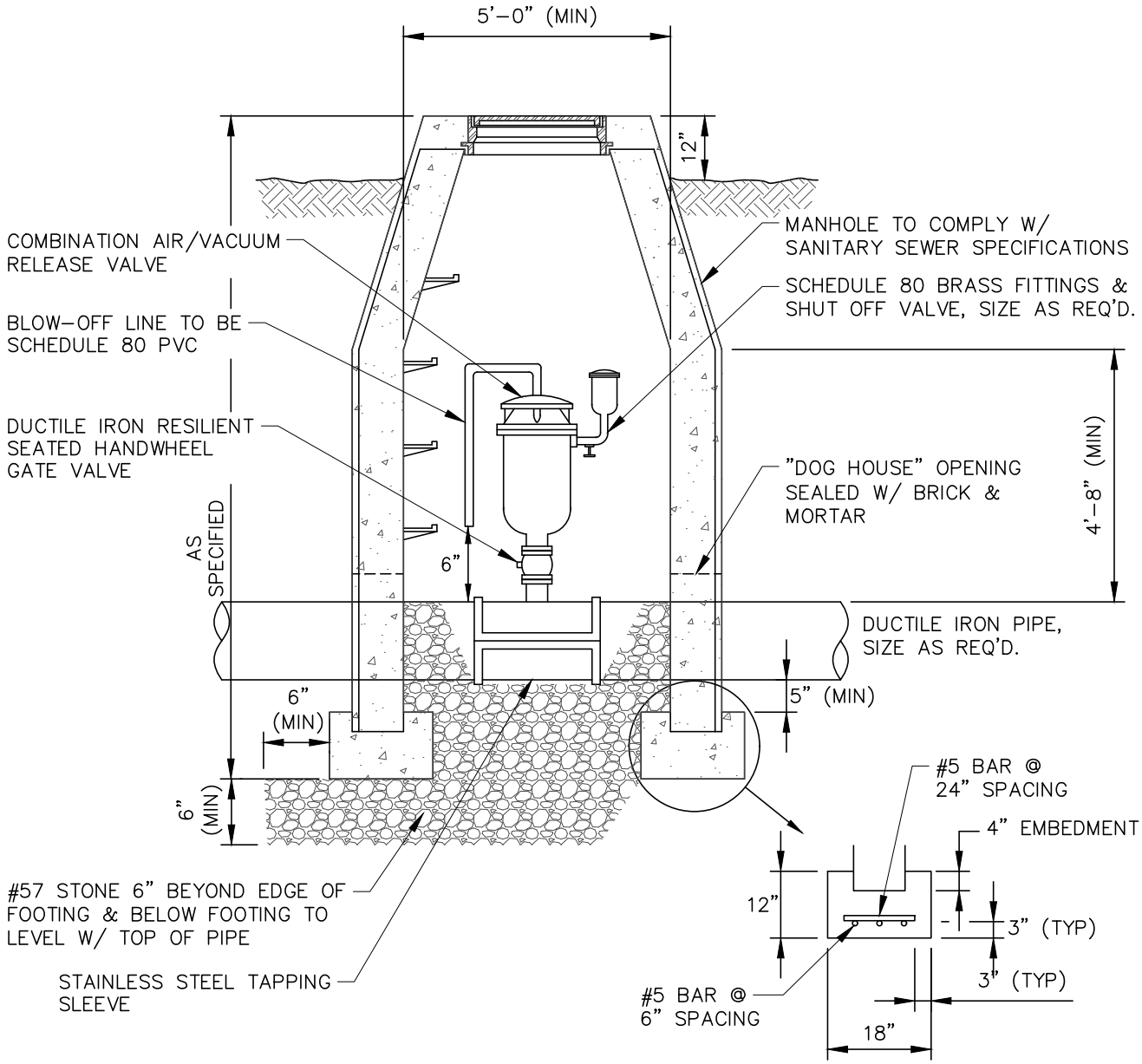


NOTE: ARV ASSEMBLY SHALL BE SET LEVEL & PLUMB.

| CITY OF DAWSONVILLE | |
|---|---|
| DETAIL TITLE | DETAIL NO. |
| COMBINATION AIR/VACUUM RELEASE VALVE | 22.1 |

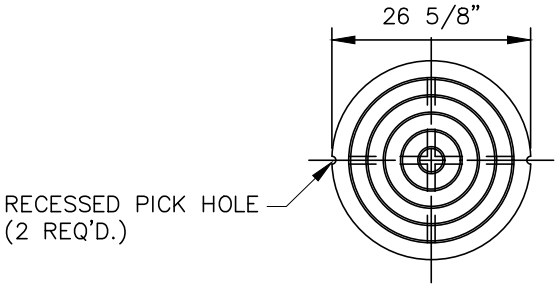


PLAN–COVER

NOTE:

SEATING SURFACE OF FRAMES & COVERS TO BE MACHINED TO FIT.

APPROX TOTAL WT. OF FRAME & COVER IS 370# OR GREATER

SHALL BE:
U.S. FOUNDRY 223 BN,
NEENAH R–1423–BN,
EAST JORDAN V1349 OR EQUAL

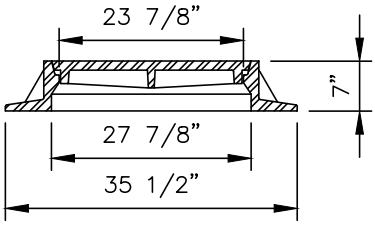


SECTION–FRAME & COVER

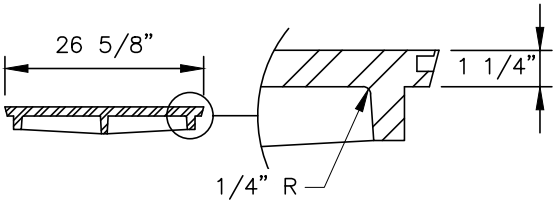


SECTION–COVER

| CITY OF DAWSONVILLE | |
|---|---|
| DETAIL TITLE | DETAIL NO. |
| TYPICAL STANDARD<br>C.I. D.I. MANHOLE FRAME AND COVER | 23.1 |

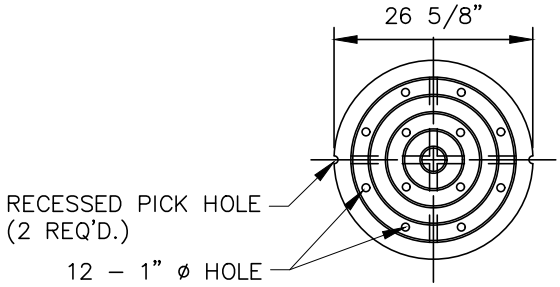


PLAN–COVER

NOTE:

SEATING SURFACE OF FRAMES & COVERS TO BE MACHINED TO FIT.

APPROX TOTAL WT. OF FRAME & COVER IS 370# OR GREATER

SHALL BE:
U.S. FOUNDRY 223 BN,
NEENAH R–1423–BN,
EAST JORDAN V1349 OR EQUAL

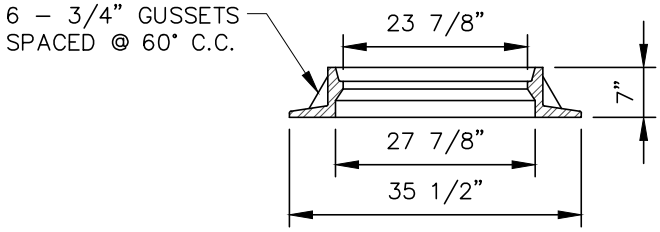


SECTION–FRAME

| CITY OF DAWSONVILLE | |
|---|---|
| DETAIL TITLE | DETAIL NO. |
| TYPICAL VENTED<br>C.I. D.I. MANHOLE FRAME AND COVER | 23.2 |

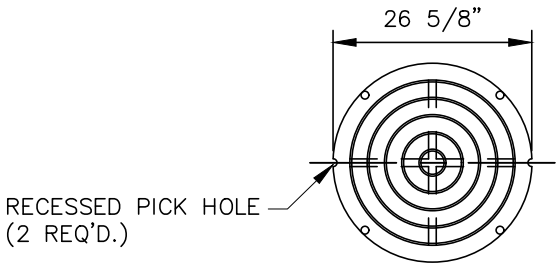


PLAN–COVER

NOTE:

SEATING SURFACE OF FRAMES & COVERS TO BE MACHINED TO FIT.

APPROX TOTAL WT. OF FRAME & COVER IS 370# OR GREATER

SHALL BE:
U.S. FOUNDRY 223 BN,
NEENAH R–1423–BN,
EAST JORDAN V1349 OR EQUAL

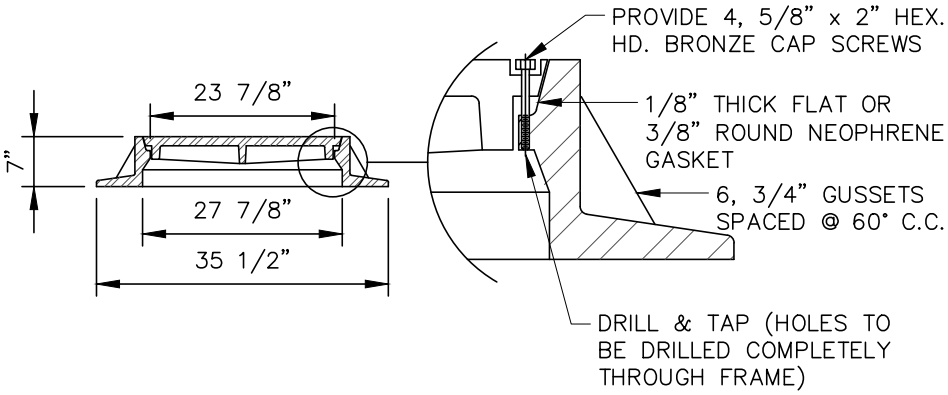


SECTION–FRAME & COVER

| CITY OF DAWSONVILLE | |
|---|---|
| DETAIL TITLE | DETAIL NO. |
| TYPICAL WATERTIGHT C.I. D.I. MANHOLE FRAME AND COVER | 23.3 |

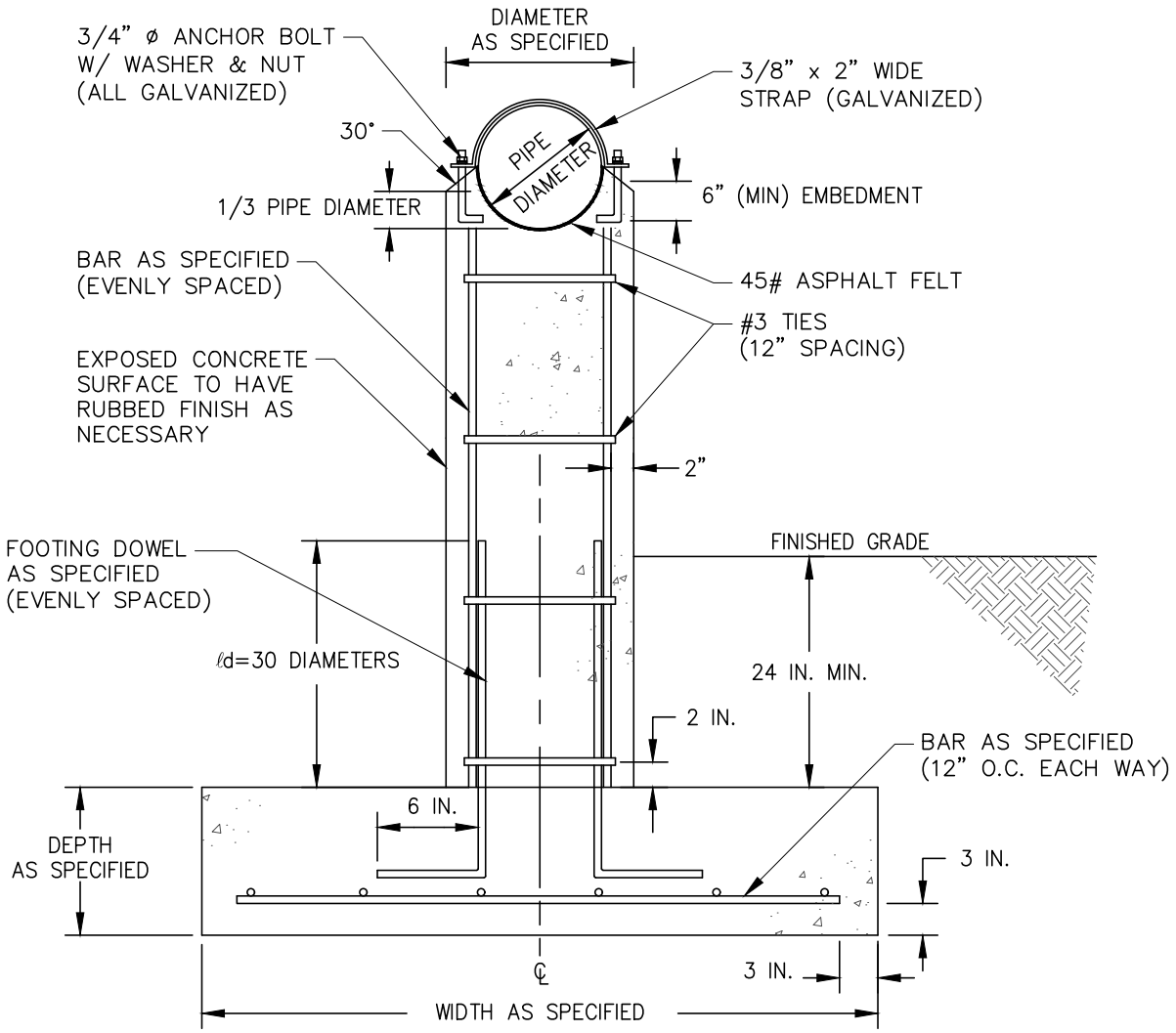


**CONCRETE PIERS**

| PIPE SIZE (INCHES) | PIER DIAMETER (INCHES) | PIER REINFORCING STEEL (EVENLY SPACED) |
|---|---|---|
| 8 | 16 | 6 : # 5 BAR, # 3 TIE AT 12" O.C. |
| 10 | 18 | 6 : # 5 BAR, # 3 TIE AT 12" O.C. |
| 12 | 20 | 6 : # 5 BAR, # 3 TIE AT 12" O.C. |
| 14 | 22 | 6 : # 6 BAR, # 3 TIE AT 12" O.C. |
| 16 | 24 | 6 : # 6 BAR, # 3 TIE AT 12" O.C. |

**CONCRETE FOOTINGS**

| PIER DIAMETER (INCHES) | FOOTING WIDTH AND DEPTH (INCHES) | FOOTING REINFORCING STEEL (EVENLY SPACED, 12 INCH MAX. SPACING EACH WAY) | FOOTING DOWELS (EVENLY SPACED) |
|---|---|---|---|
| 16 | 40 X 40 X 12 DEPTH | # 5 BAR | # 5 BAR |
| 18 | 42 X 42 X 15 DEPTH | # 5 BAR | # 5 BAR |
| 20 | 44 X 44 X 15 DEPTH | # 5 BAR | # 5 BAR |
| 22 | 46 X 46 X 18 DEPTH | # 6 BAR | # 6 BAR |
| 24 | 48 X 48 X 20 DEPTH | # 6 BAR | # 6 BAR |

| CITY OF DAWSONVILLE | |
|---|---|
| DETAIL TITLE | DETAIL NO. |
| PIER DIMENSIONS AND SECTION | 24.1 |

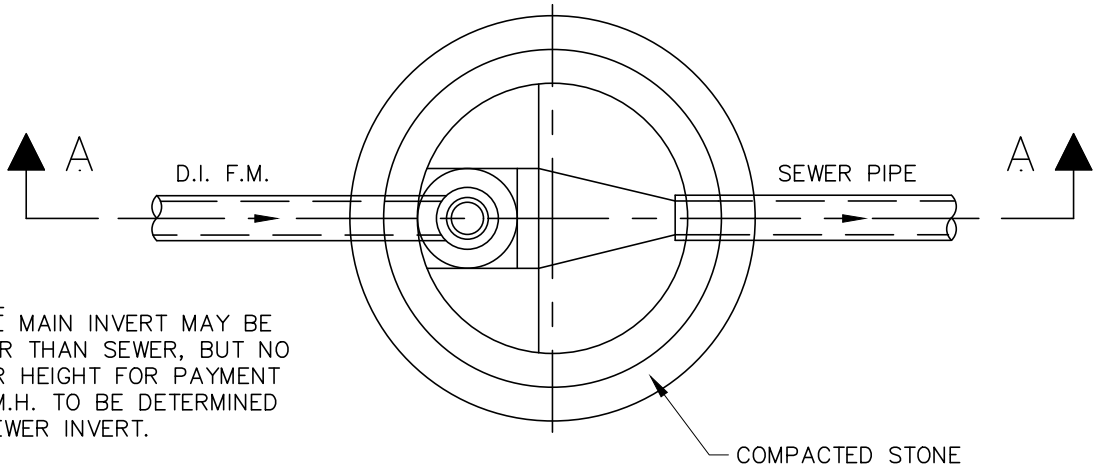


NOTE:
FORCE MAIN INVERT MAY BE HIGHER THAN SEWER, BUT NO LOWER HEIGHT FOR PAYMENT FOR M.H. TO BE DETERMINED BY SEWER INVERT.

PLAN

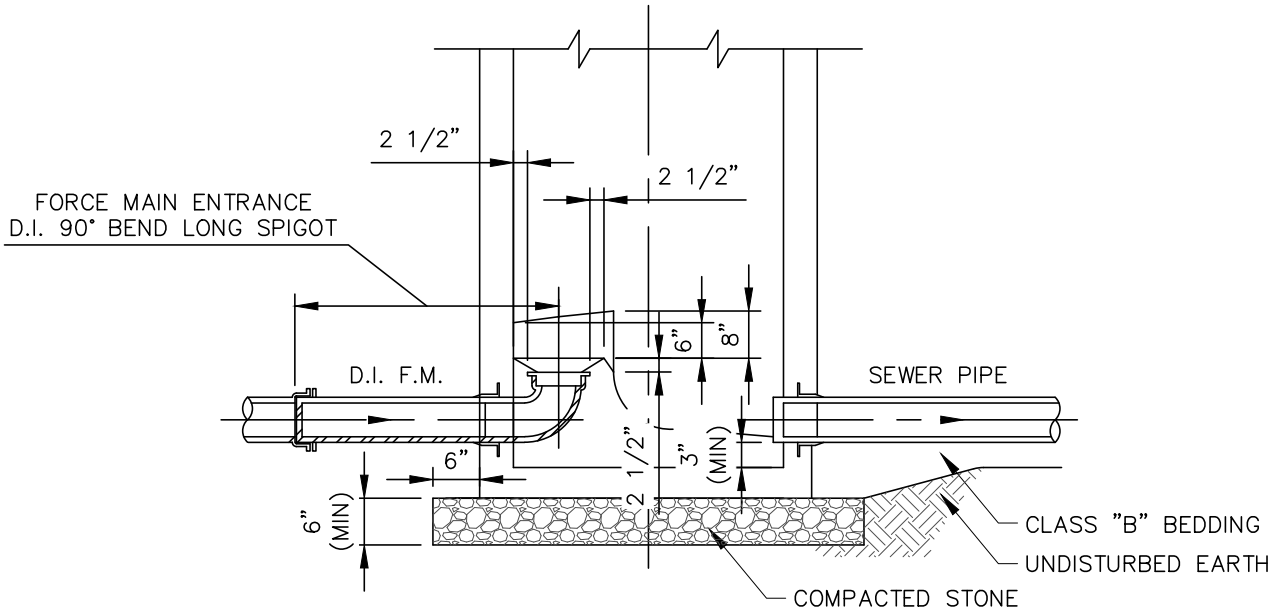


SECTION A–A

NOTE:
WASTEWATER PIPE CONNECTIONS TO EXISTING MANHOLES SHALL BE MADE IN SUCH A MANNER THAT THE FINISHED WORK SHALL CONFORM AS NEARLY AS PRACTICABLE TO THE ESSENTIAL REQUIREMENTS SPECIFIED FOR NEW MANHOLES. THE CONTRACTOR SHALL BREAK OUT AS SMALL AN OPENING IN THE EXISTING MANHOLE AS NECESSARY TO INSERT THE NEW WASTEWATER PIPE. THE EXISTING CONCRETE FOUNDATION BENCH SHALL BE CHIPPED TO THE CROSS–SECTION OF THE NEW PIPE IN ORDER TO FORM A SMOOTH CONTINUOUS INVERT SIMILAR TO WHAT WOULD BE FORMED IN A NEW CONCRETE BASE. NON–SHRINK GROUT SHALL BE USED TO SEAL THE NEW LINE SO THE JUNCTION IS WATERTIGHT. THE BYPASSING OF RAW WASTEWATER ONTO THE GROUND OR INTO A RECEIVING STREAM IS STRICTLY PROHIBITED.

| CITY OF DAWSONVILLE | |
|---|---|
| DETAIL TITLE | DETAIL NO. |
| FORCE MAIN CONNECTION TO MANHOLE | 25.1 |

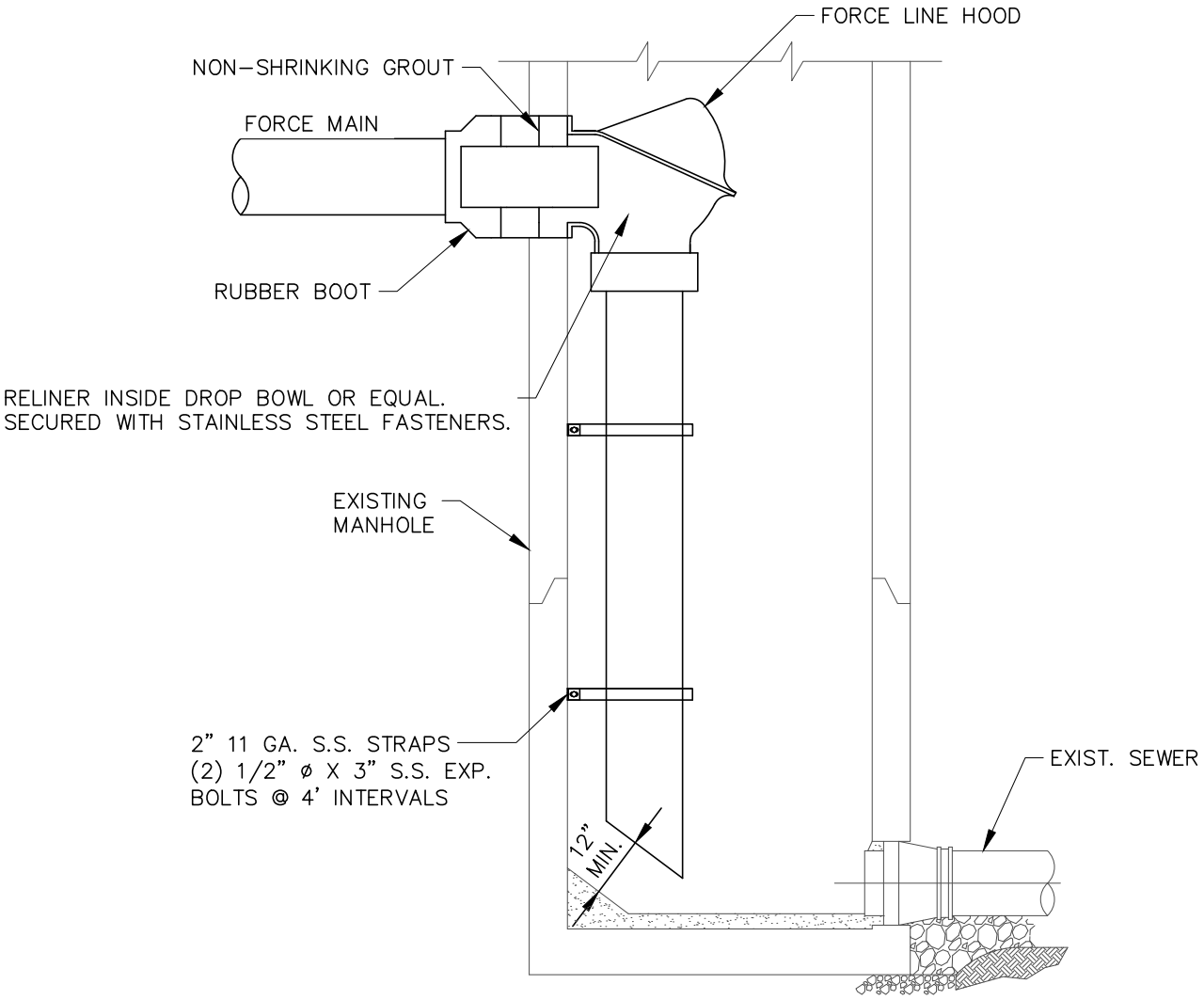


| CITY OF DAWSONVILLE | |
|---|---|
| DETAIL TITLE | DETAIL NO. |
| FORCE MAIN CONNECTION TO MANHOLE (DROP BOWL) | 25.2 |

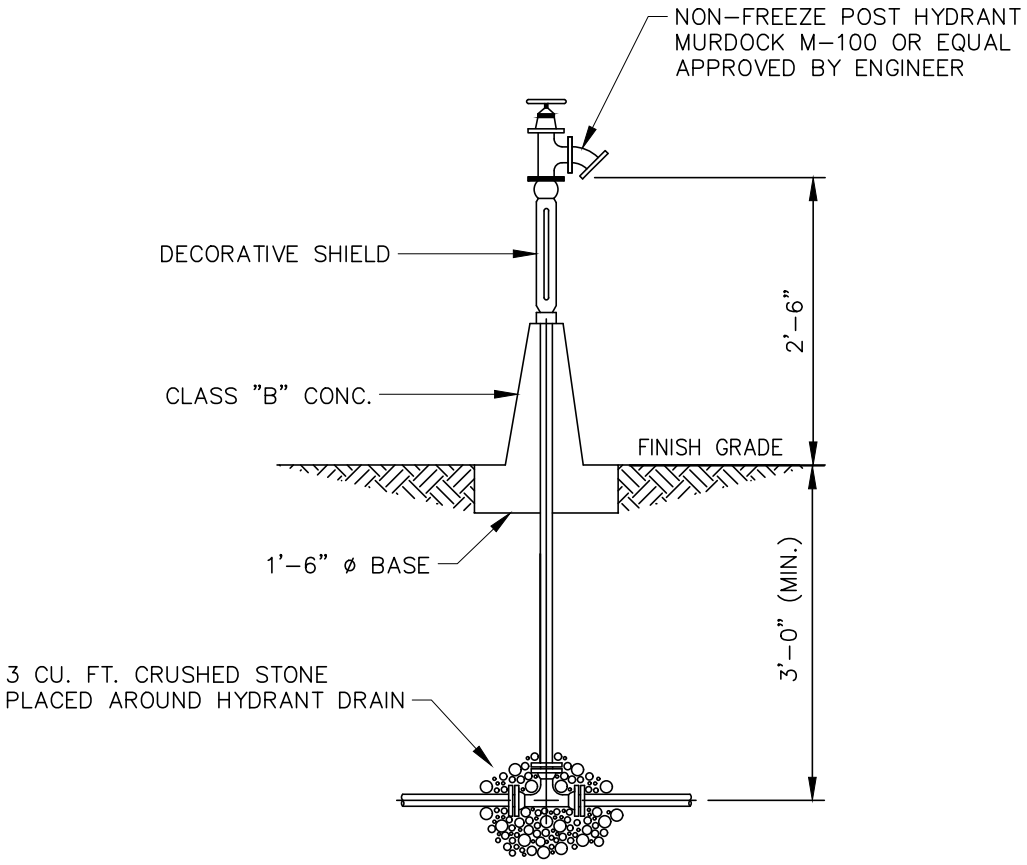


NOTE: THE DISTANCE FROM THE WATER MAIN TO THE YARD HYDRANT SHALL BE DETERMINED IN FIELD BY ENGINEER.

| CITY OF DAWSONVILLE | |
|---|---|
| DETAIL TITLE | DETAIL NO. |
| YARD HYDRANT | 26.1 |

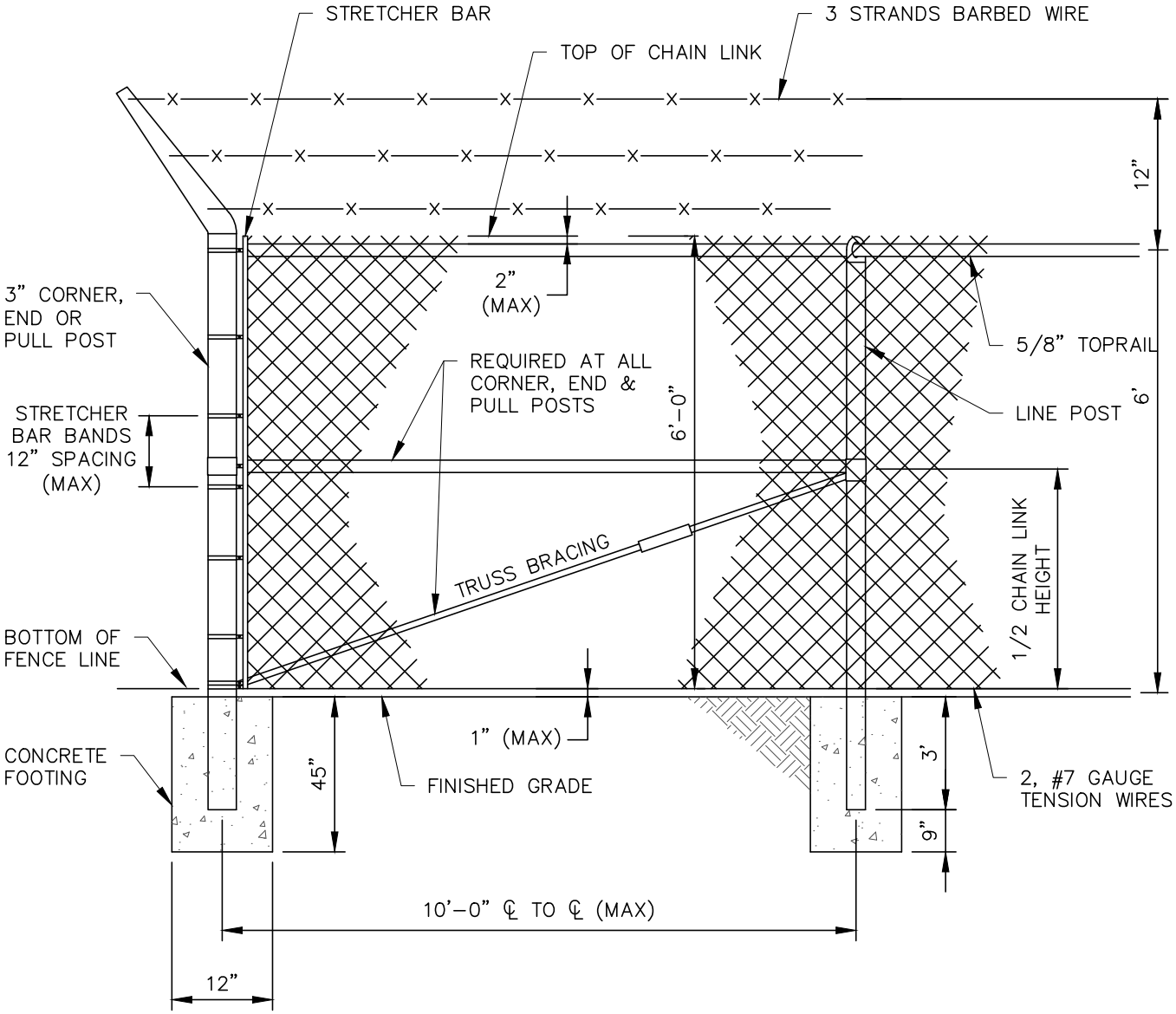


NOTE:

1. PROVIDE PVC COATED CHAIN LINK FOR FENCE.
2. INSTALL 14' WIDE DOUBLE SWING GATE.

| CITY OF DAWSONVILLE | |
|---|---|
| DETAIL TITLE | DETAIL NO. |
| CHAIN LINK FENCE | 27.1 |

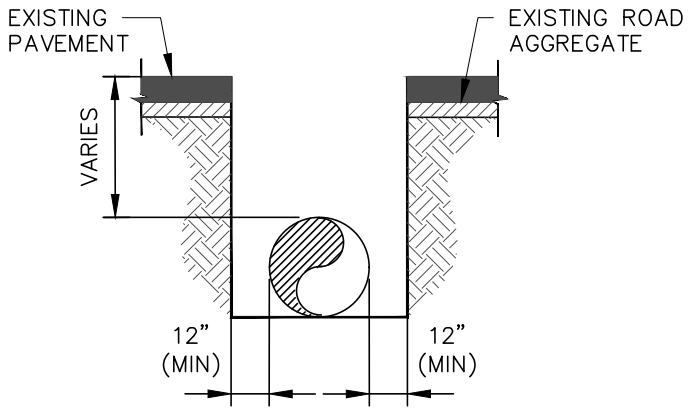


PAVEMENT TO BE SAW CUT
TO NEAT LINES AND REMOVED

STAGE 1

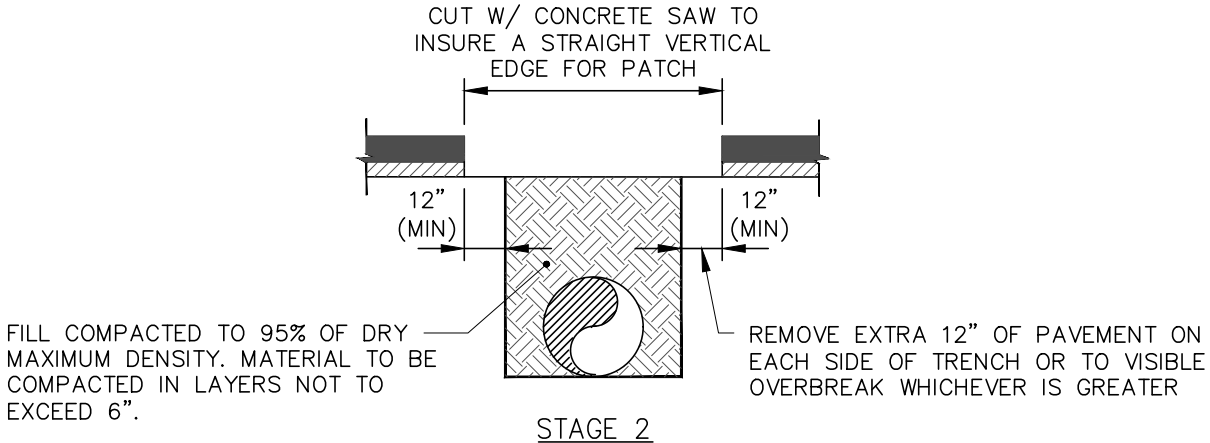


STAGE 2

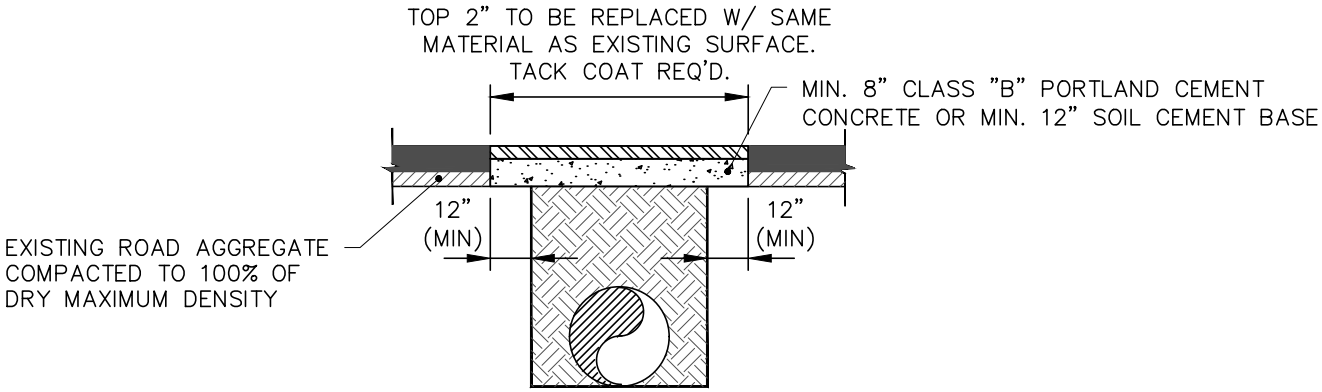


SURFACES TO BE CLEANED AND
BITUMINOUS TACK COAT APPLIED BEFORE
PLACEMENT OF TYPE "E" OR "F" ASPHALTIC.

STAGE 3

| CITY OF DAWSONVILLE | |
|---|---|
| DETAIL TITLE | DETAIL NO. |
| TYPICAL ASPHALT REPLACEMENT | 28.1 |

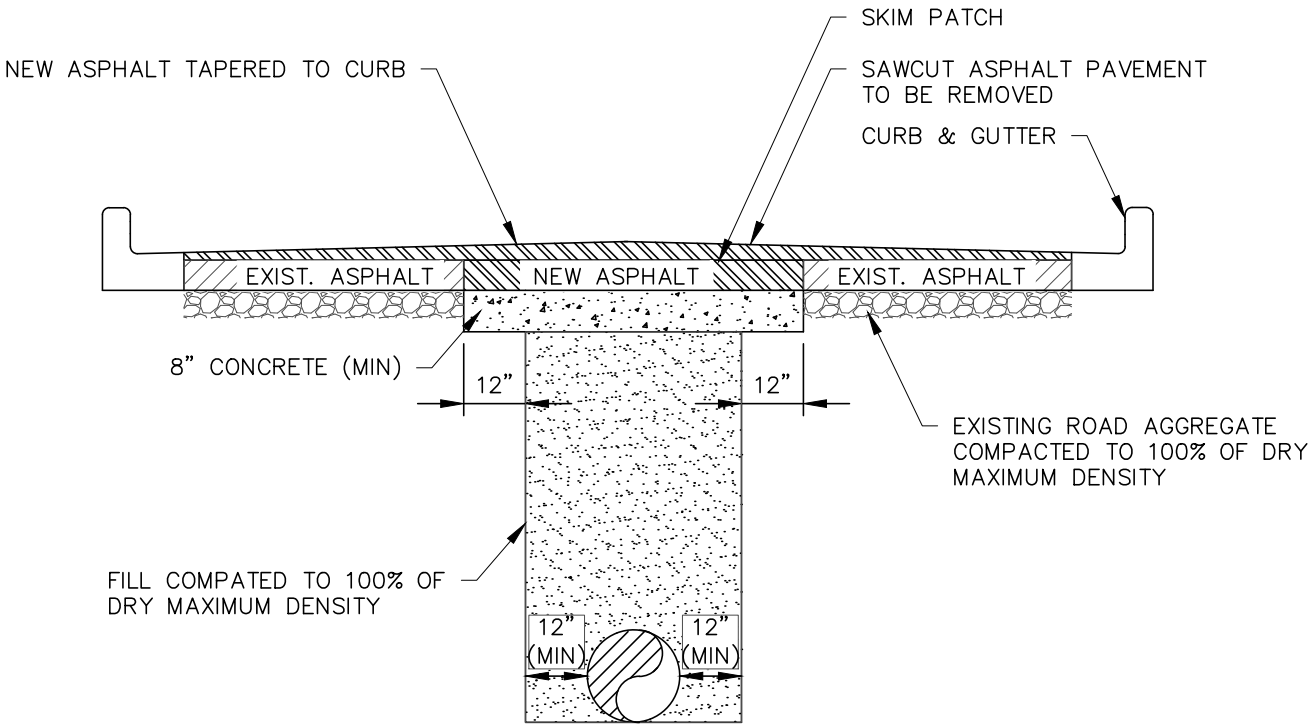


NOTE: TAPER NEW ASPHALT PAVEMENT TO EXISTING PAVEMENT.

| CITY OF DAWSONVILLE | |
|---|---|
| DETAIL TITLE | DETAIL NO. |
| TYPICAL ASPHALT TO CURB REPLACEMENT | 29.1 |

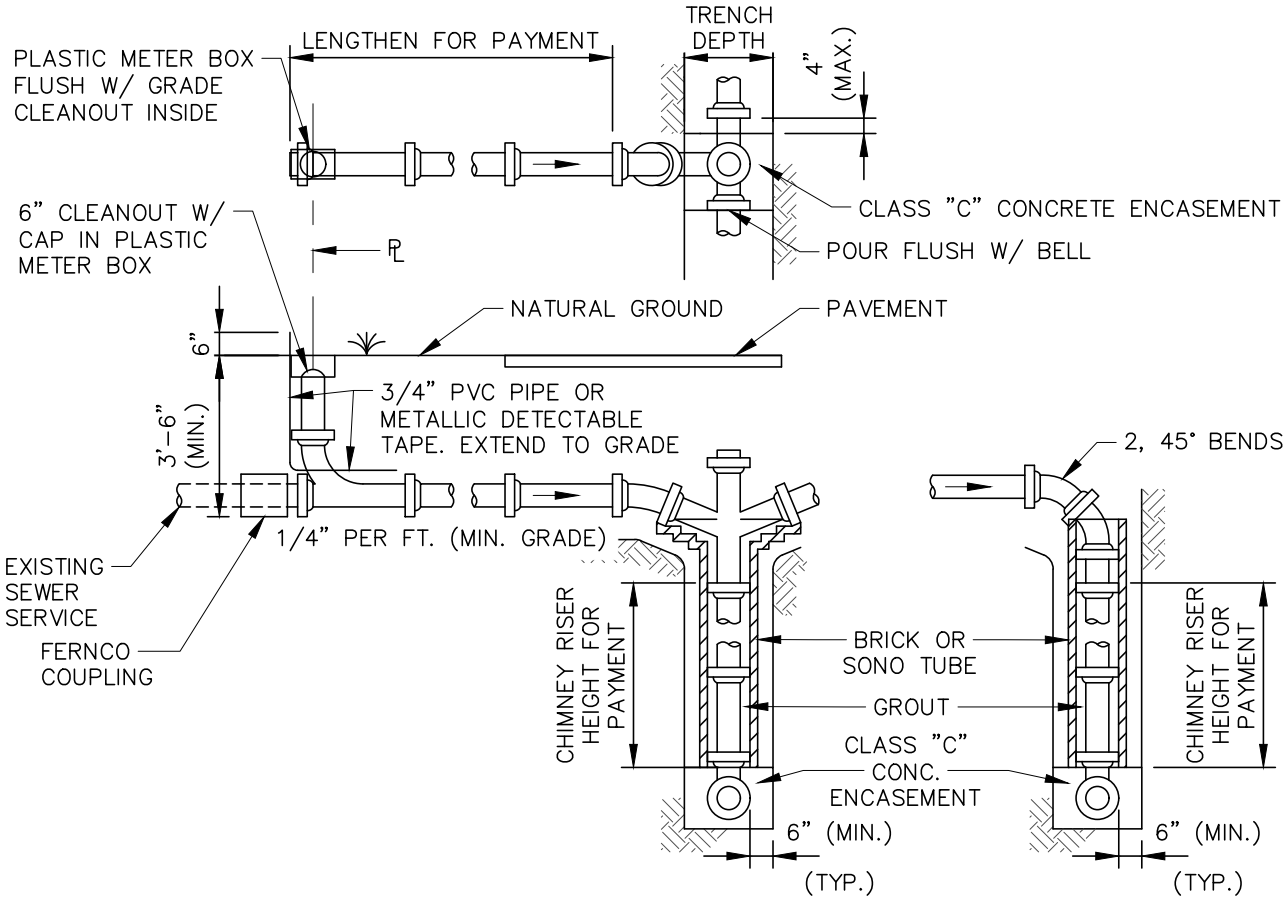


TYP. FOR DEEP CUTS

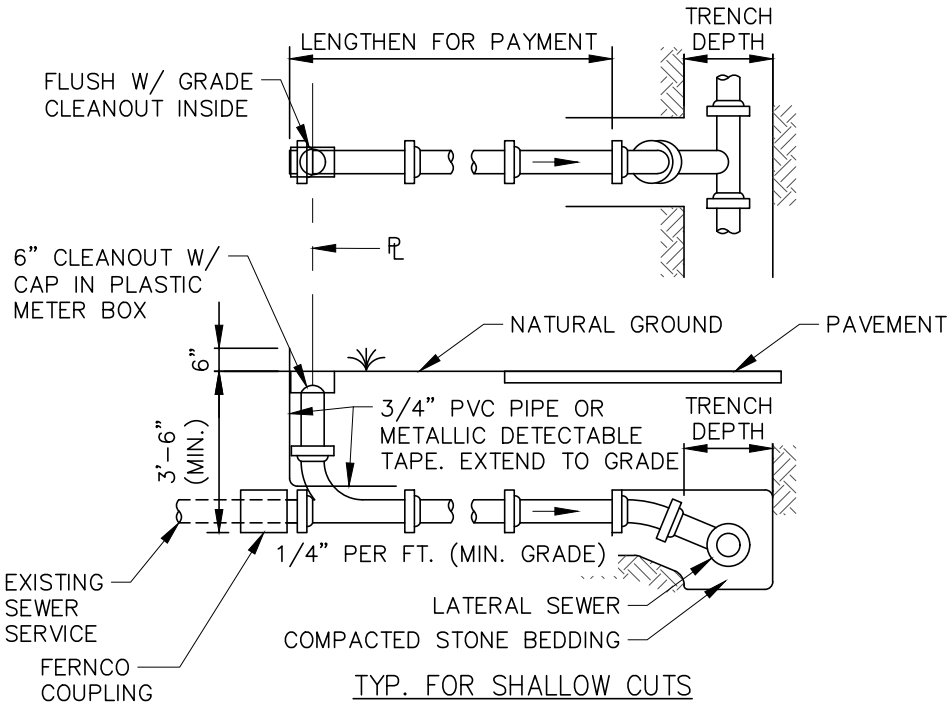


TYP. FOR SHALLOW CUTS

| CITY OF DAWSONVILLE | |
|---|---|
| DETAIL TITLE | DETAIL NO. |
| TYPICAL CLEANOUT ASSEMBLY | 30.1 |

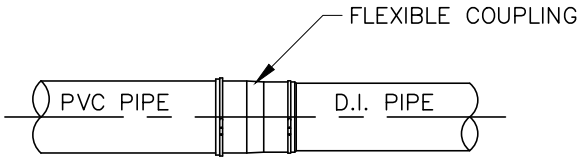


NOTE:

1. CONTRACTOR TO USE COUPLING AS RECOMMENDED BY MFG. IN JOINTING UNLIKE TYPES OF PIPE.
2. CONTRACTOR TO USE FLEXIBLE COUPLING IN LIEU OF CONCRETE COLLAR, PIPE SIZES 4" THRU 24".

FLEXIBLE COUPLING

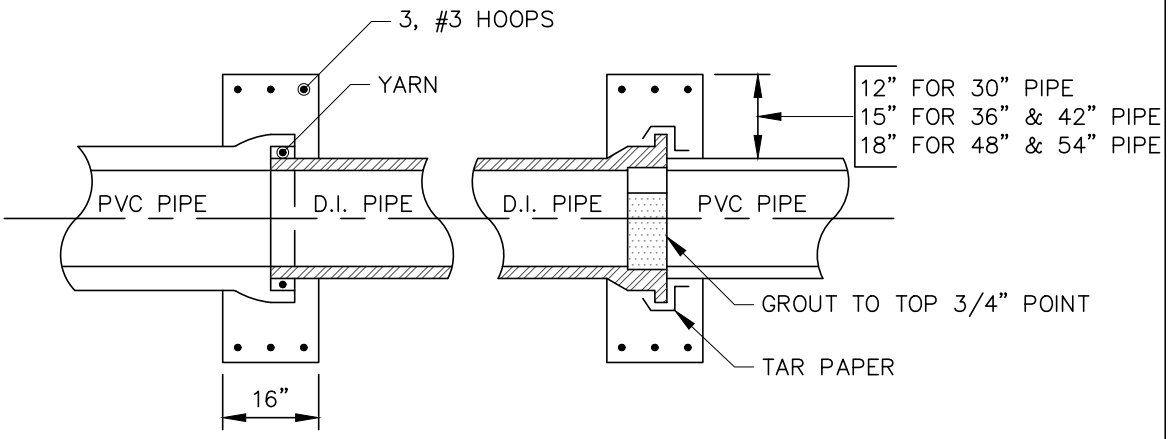


NOTE:

COLLAR TO BE CLASS "B" CONCRETE.

CONCRETE COLLAR

| CITY OF DAWSONVILLE | |
|---|---|
| DETAIL TITLE | DETAIL NO. |
| D.I. PIPE AND PVC PIPE CONNECTION DETAIL | 31.1 |

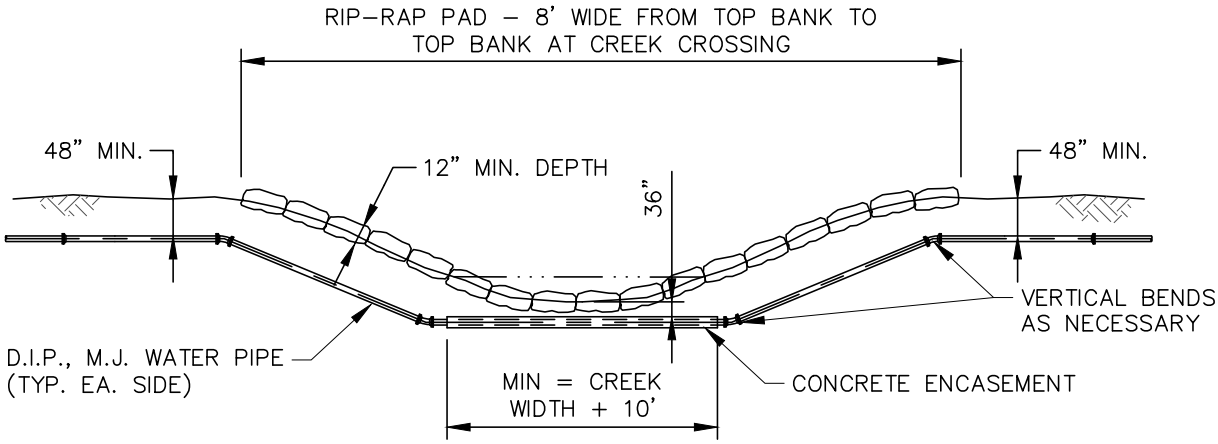


NOTE:

1. ALL JOINTS IN D.I.P.. M.J. USED IN CREEK CROSSINGS SHALL BE RESTRAINED WITH M.J. RETAINER GLANDS–EBAA IRON OR EQUAL.
2. PROVIDE CONCRETE ENCASEMENT WHERE INDICATED ON THE DRAWIINGS OR AS DIRECTED BY THE ENGINEER.

| CITY OF DAWSONVILLE | |
|---|---|
| DETAIL TITLE | DETAIL NO. |
| WATER LINE CREEK CROSSING DETAIL | 32.1 |

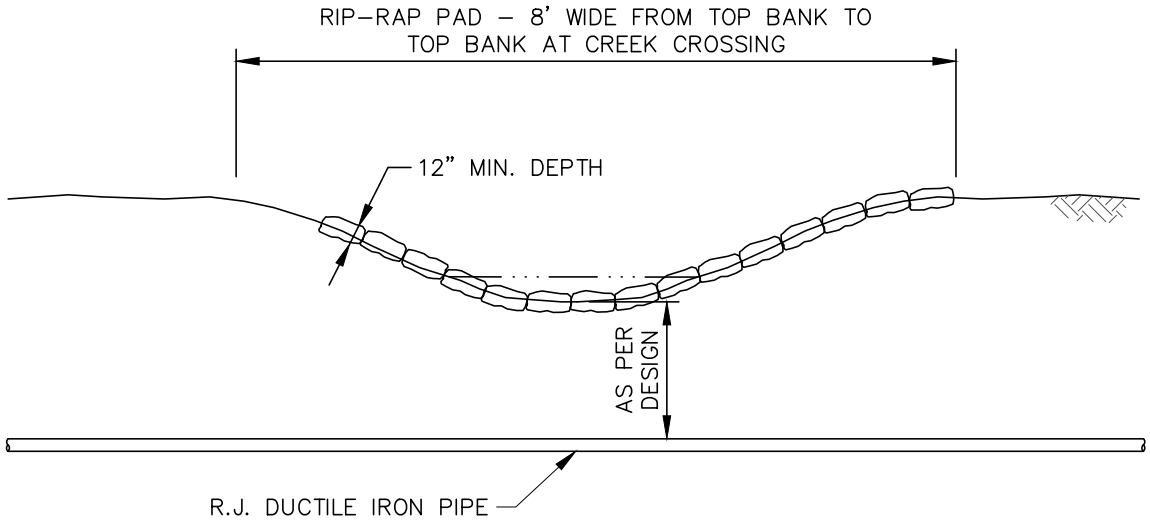


NOTE:

1. ALL JOINTS IN D.I.P.. M.J. USED IN CREEK CROSSINGS SHALL BE RESTRAINED WITH M.J. RETAINER GLANDS–EBAA IRON OR EQUAL.

| CITY OF DAWSONVILLE | |
|---|---|
| DETAIL TITLE | DETAIL NO. |
| SEWER LINE CREEK CROSSING DETAIL | 32.2 |

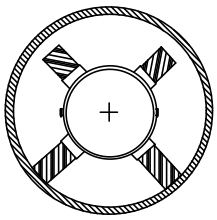

STANDARD
POSITIONING FOR
SANITARY SEWER

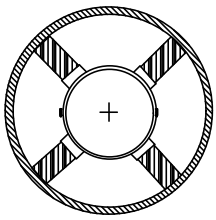

CENTERED/RESTRAINED
POSITIONING FOR WATER MAINS
MECHANICAL JOINT PIPE
REQUIRED FOR WATER MAINS

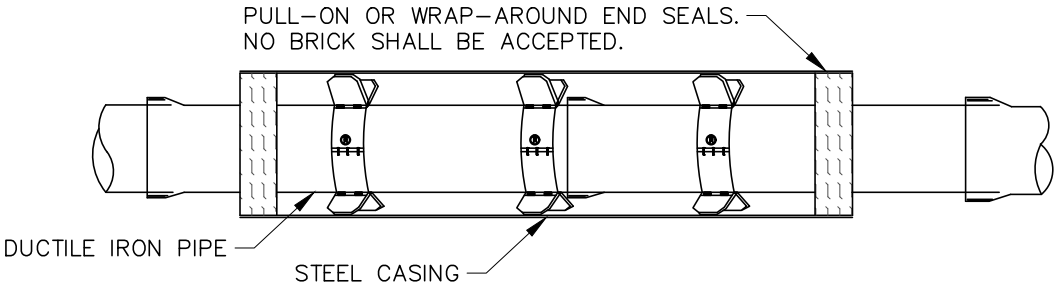


NOTES:

1. STEEL PIPE CASING SHALL BE MANUFACTURED FROM STEEL CONFORMING TO ASTM A252 GRADE 2 AS AMENDED TO DATE, WITH A MINIMUM YIELD STRENGTH OF 35,000 PSI BEFORE COLD FORMING. PIPE MAY BE STRAIGHT SEAM OR SPIRAL WELD.
2. CASING PIPE SHALL EXTEND A MINIMUM OF 3' BEYOND TOE OF FILL SLOPES, DITCH LINES, EDGE OF PAVEMENT OR BACK OF CURB.
3. CARRIER PIPE SHALL BE RESTRAINED JOINT DUCTILE IRON PIPE.

| D.I. PUSH–ON JOINT CARRIER PIPE SIZE | CASING PIPE | | | |
|---|---|---|---|---|
| | ROADWAY | | RAILROAD | |
| | SIZE | THICKNESS* | SIZE | THICKNESS* |
| 4" | 10" | .250" | 12" | .250" |
| 6" | 12" | .250" | 16" | .312" |
| 8" | 14" | .250" | 18" | .312" |
| 10" | 16" | .312" | 20" | .312" |
| 12" | 18" | .312" | 24" | .312" |
| 14" | 20" | .312" | 20" | .375" |
| 16" | 24" | .375" | 24" | .375" |
| 18" | 26" | .375" | 26" | .375" |
| 20" | 28" | .375" | 28" | .375" |
| 24" | 32" | .375" | 32" | .375" |

* .063" HAS BEEN ADDED TO MIN. FOR CORROSION ALLOWANCE

SPACER NOTES:

1. SPACER OPTIONS: 8" WIDE BAND OR 12".
2. APPROVED TYPES ARE CASCADE OR PSI.
3. INSTALLATION SHALL BE IN ACCORDANCE WITH THE MANUFACTURERS STANDARDS.
4. WOODEN SKIDS SHALL NOT BE ACCEPTABLE.

| CITY OF DAWSONVILLE | |
|---|---|
| DETAIL TITLE | DETAIL NO. |
| TYPICAL ENCASED CROSSING DETAIL | 33.1 |

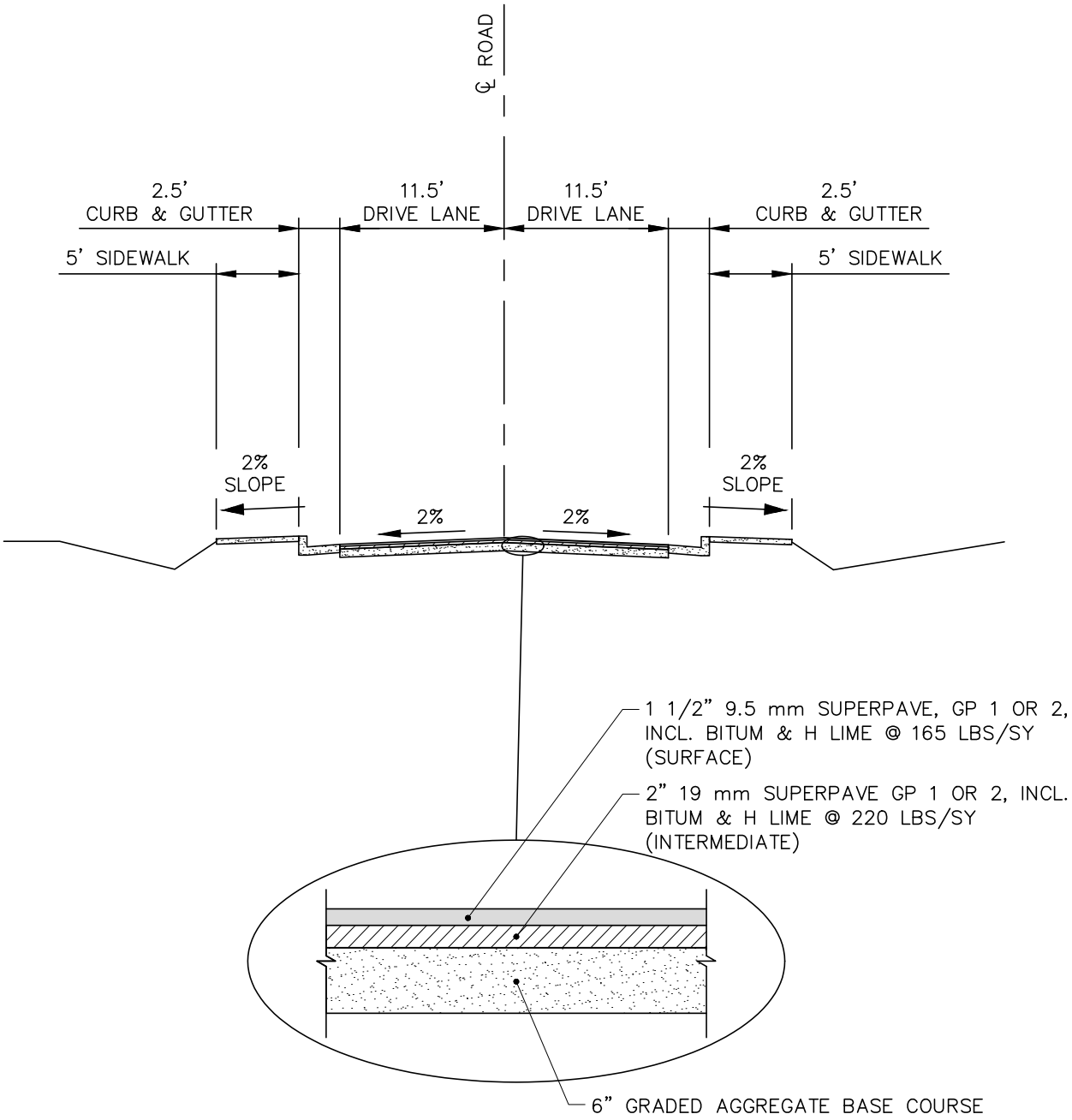


| CITY OF DAWSONVILLE | |
|---|---|
| DETAIL TITLE | DETAIL NO. |
| TYPICAL SECTION<br>SUBDIVISION ROAD | 34.1 |

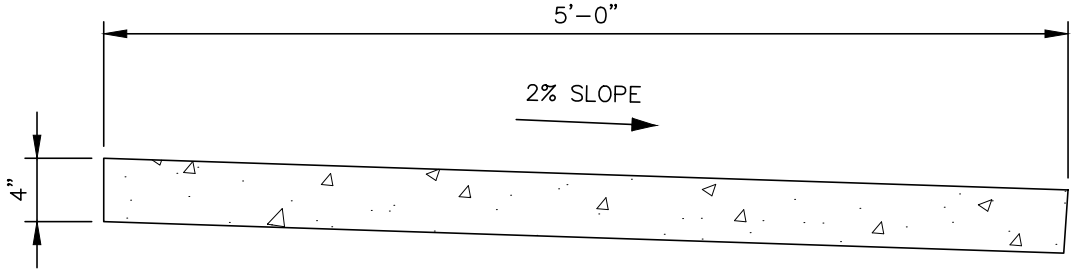


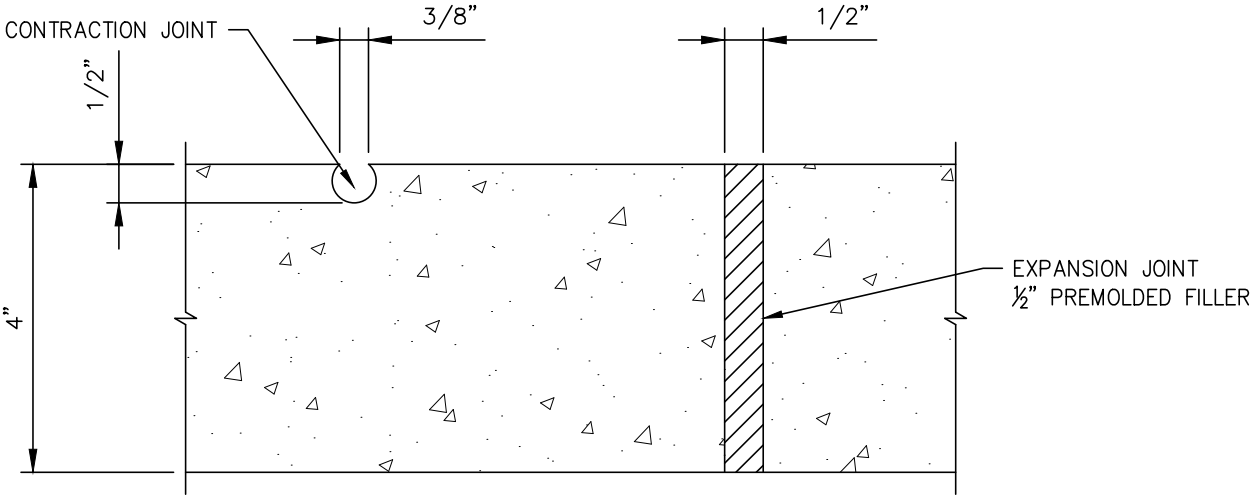


NOTES:

1. CONCRETE TO BE PLACED 4" THICK AND FINISHED WITH TAMPS, WOOD FLOATS AND STIFF-BRISTLE BROOMS.
2. TRANSVERSE CONTRACTION JOINTS SHALL BE PLACED AT 20' INTERVALS. ALL EDGES TO BE ROUNDED TO ¼" RADIUS.
3. 1/2" EXPANSION JOINTS SHALL BE PLACED, WHERE SIDEWALK TIES INTO A STRUCTURE OR TERMINATES AT CURB, RAMPS OR DRIVEWAYS AND AT 60' INTERVALS.
4. CONCRETE SHALL BE CLASS "A" (3,000 PSI).

| CITY OF DAWSONVILLE | |
|---|---|
| DETAIL TITLE | DETAIL NO. |
| TYPICAL SIDEWALK DETAIL | 35.1 |

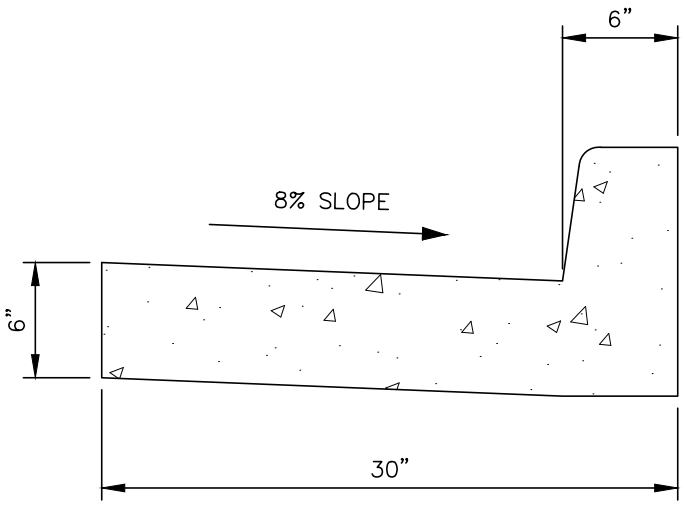


NOTE:

1. CONCRETE SHALL BE CLASS ”A” (3,000 PSI).

| CITY OF DAWSONVILLE | |
|---|---|
| DETAIL TITLE | DETAIL NO. |
| TYPICAL CURB & GUTTER DETAIL | 36.1 |

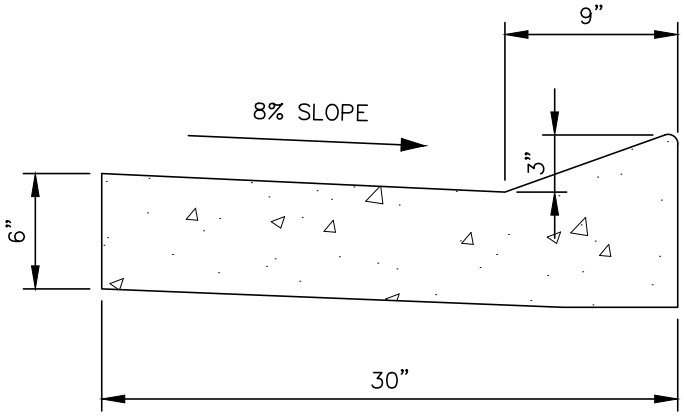


NOTE:

1. RAISED EDGE TO BE CONSTRUCTED WITH SAME CONCRETE MIX AS THE GUTTER AND SHALL BE FORMED MONOLITHIC WITH GUTTER. JOINTS IN RAISED EDGE SHALL MATCH THOSE IN THE GUTTER.

| CITY OF DAWSONVILLE | |
|---|---|
| DETAIL TITLE | DETAIL NO. |
| ROLL BACK CURB & GUTTER DETAIL | 36.2 |

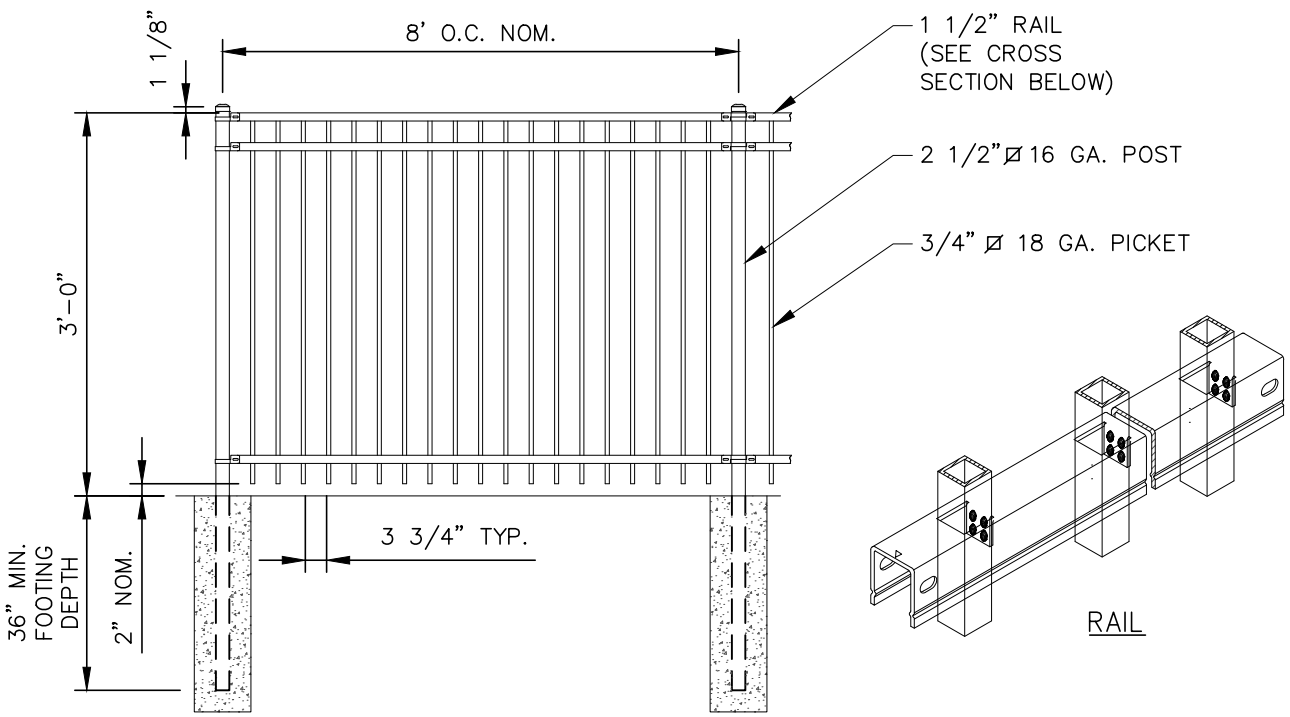


NOTES:

1. WELDED ORNAMENTAL STEEL FENCE SYSTEM SHALL BE MONTAGE PLUS, MAJESTIC STYLE 3-RAIL PANELS WITH 4" AIR GAP MANUFACTURED BY AMERISTAR.

2. SHOP DRAWINGS SHALL BE SUBMITTED AND APPROVED PRIOR TO CONSTRUCTION.

3. UPON RECEIPT AT THE JOB SITE, ALL MATERIALS SHALL BE CHECKED TO ENSURE THAT NO DAMAGE OCCURRED DURING SHIPPING OR HANDLING. MATERIALS SHALL BE STORED IN SUCH A MANNER TO ENSURE PROPER VENTILATION AND DRAINAGE, AND TO PROTECT AGAINST DAMAGE, WEATHER AND VANDALISM.

4. ALL STRUCTURAL FENCE COMPONENTS (I.E. RAILS, PICKETS, AND POSTS) SHALL BE WARRANTED WITHIN SPECIFIED LIMITATIONS, BY THE MANUFACTURER AS STATED IN THE PRODUCT WARRANTY. WARRANTY SHALL COVER ANY DEFECTS IN MATERIAL FINISH, INCLUDING CRACKING, PEELING, CHIPPING, BLISTERING OR CORRODING.

5. REIMBURSEMENT FOR LABOR NECESSARY TO RESTORE OR REPLACE COMPONENTS THAT HAVE BEEN FOUND TO BE DEFECTIVE UNDER THE TERMS OF MANUFACTURES WARRANTY SHALL BE GUARANTEED FOR FIVE (5) YEARS FROM DATE OF ORIGINAL PURCHASE.

6. STEEL MATERIAL FOR FENCE PANELS AND POSTS SHALL CONFORM TO THE REQUIREMENTS OF ASTM A653/A653M, WITH A MINIMUM YIELD STRENGTH OF 45,000 PSI (310 MPA) AND A MINIMUM ZINC (HOT-DIP GALVANIZED) COATING WEIGHT OF 0.60 OZ/FT2 (184 G/M2), COATING DESIGNATION G-60.

7. MATERIAL FOR PICKETS SHALL BE 5/8"SQUARE X 18 GA. TUBING. THE RAILS SHALL BE STEEL CHANNEL, 1.25"X 0.92"X 14 GA. PICKET HOLES IN THE RAIL SHALL BE SPACED (SPECIFY 4.334"O.C. FOR STANDARD PICKET SPACE). FENCE POSTS SHALL BE A MINIMUM OF 2"SQUARE X 16 GA.

8. WHEN CUTTING/DRILLING RAILS OR POSTS ADHERE TO THE FOLLOWING STEPS TO SEAL THE EXPOSED STEEL SURFACES; 1) REMOVE ALL METAL SHAVINGS FROM CUT AREA. 2) APPLY ZINC-RICH PRIMER TO THOROUGHLY COVER CUT EDGE AND/OR DRILLED HOLE; LET DRY. 3) APPLY 2 COATS OF CUSTOM FINISH PAINT MATCHING FENCE COLOR. FAILURE TO SEAL EXPOSED SURFACES PER STEPS 1-3 ABOVE WILL NEGATE WARRANTY. AMERISTAR SPRAY CANS OR PAINT PENS SHALL BE USED TO PRIME AND FINISH EXPOSED SURFACES; IT IS RECOMMENDED THAT PAINT PENS BE USED TO PREVENT OVERSPRAY. USE OF NON-AMERISTAR PARTS OR COMPONENTS WILL NEGATE THE MANUFACTURES' WARRANTY.

9. THE COLOR SHALL BE BLACK.

| CITY OF DAWSONVILLE | |
|---|---|
| DETAIL TITLE | DETAIL NO. |
| ORNAMENTAL STEEL HANDRAIL DETAIL | 37.1 |